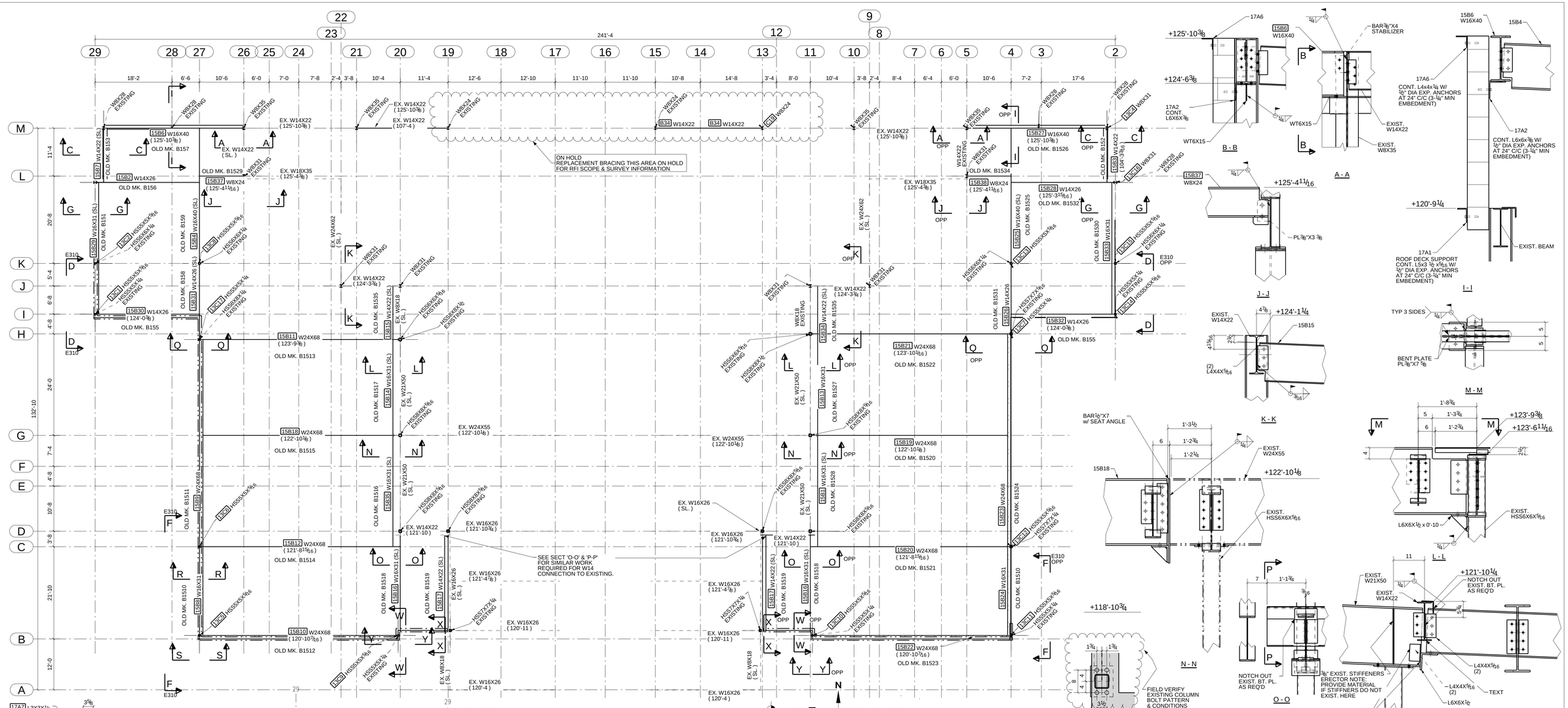

JDC ROOF FRAMING PLAN

1:128

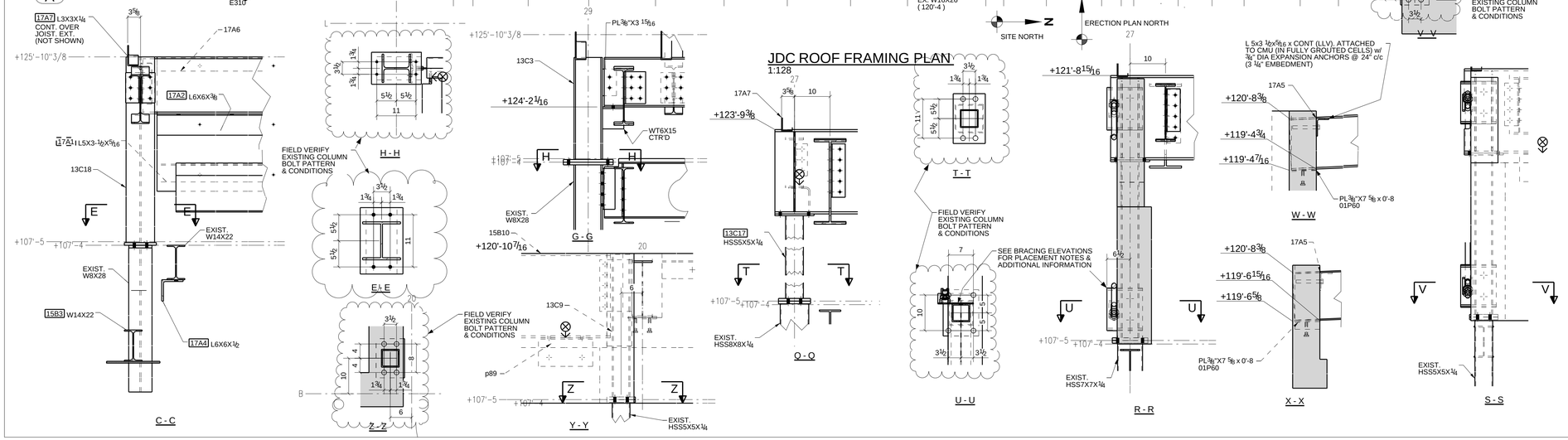

DRAWINGS PREPARED BY DETAILER FROM INFORMATION CONTAINED IN THE PROJECT DOCUMENTS WITH INSTRUCTIONS FROM THE FABRICATOR. DETAILER IS NOT RESPONSIBLE FOR ANY DESIGN, ENGINEERING OR CODE ISSUES WHICH MAY ARISE FROM THE USE OF THESE DRAWINGS. APPROVALS SHOULD BE OBTAINED FROM THE OWNER, ARCHITECT, ENGINEER, CONTRACTOR, WHICH EVER IS APPLICABLE. THE FABRICATOR SHOULD CHECK THE DETAIL DOCUMENTS FOR CORRECTNESS BEFORE RELEASING FOR FABRICATION. THE USE OF THE DETAILED DRAWINGS FOR FABRICATION CONSTITUTES ACCEPTANCE AND APPROVAL OF THE DRAWINGS, MATERIAL LIST OR CUT LIST, WHICH EVER APPLIES.

REV.	DESCRIPTION	DATE	DWN	CHK
1	For Fabrication & F&F W/OLD MARK INFO.	9/17/10	TMc	TAN
0	For Approval & Field Survey	8/30/10	TMc	TAN
A	For Approval & Field Survey	8/26/10	TMc	TAN

GENERAL NOTES

MATERIAL: A992 / A36 U/N | ELECTRODES: E70XX LH | REF. DRG.
HOLES: 13/16 DIA. U/N | CONN'S: -
SURFACE PREP. AND PAINT:
SSPC-SP-2
GREY PRIMER DEVOE NA-195 (U.N.)

JOB USE
SHOP
APPROVAL

DESCRIPTION: JDC ADDITION~ROOF FRAMING PLAN

PROJ. NAME Hamilton High School Phase III
LOCATION Hamilton City School District - Hamilton, OH
CONTRACTOR GC Contracting ARCH./ENG. SHP

DRAWN BY TMc
DATE 08/20/2010
CHKD. BY TAN
DATE
JOB No. 10-16
DRG. No. E304
REV. 1

Avenue Fabricating Inc.
1281 Clough Pike
Batavia, OH 45103
(513) 752-1911

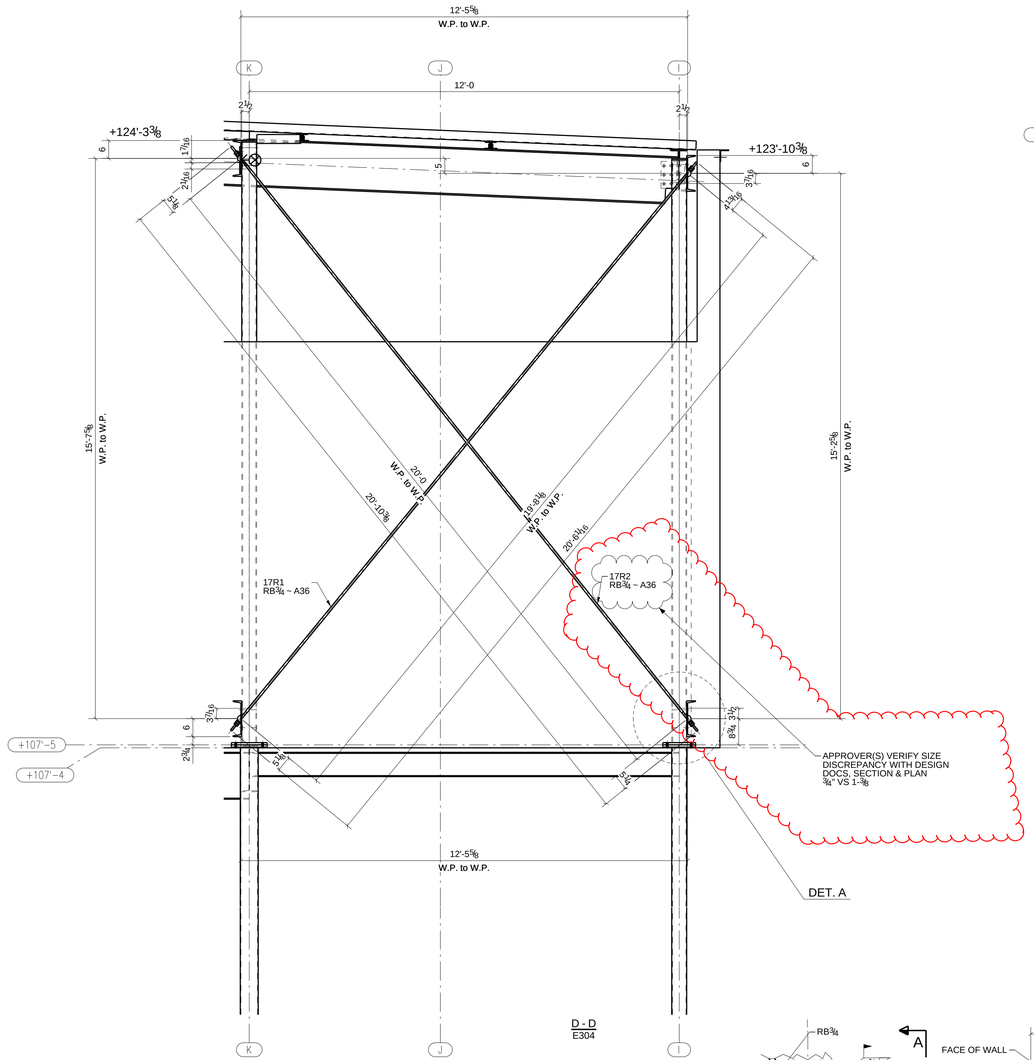

D - D
E304

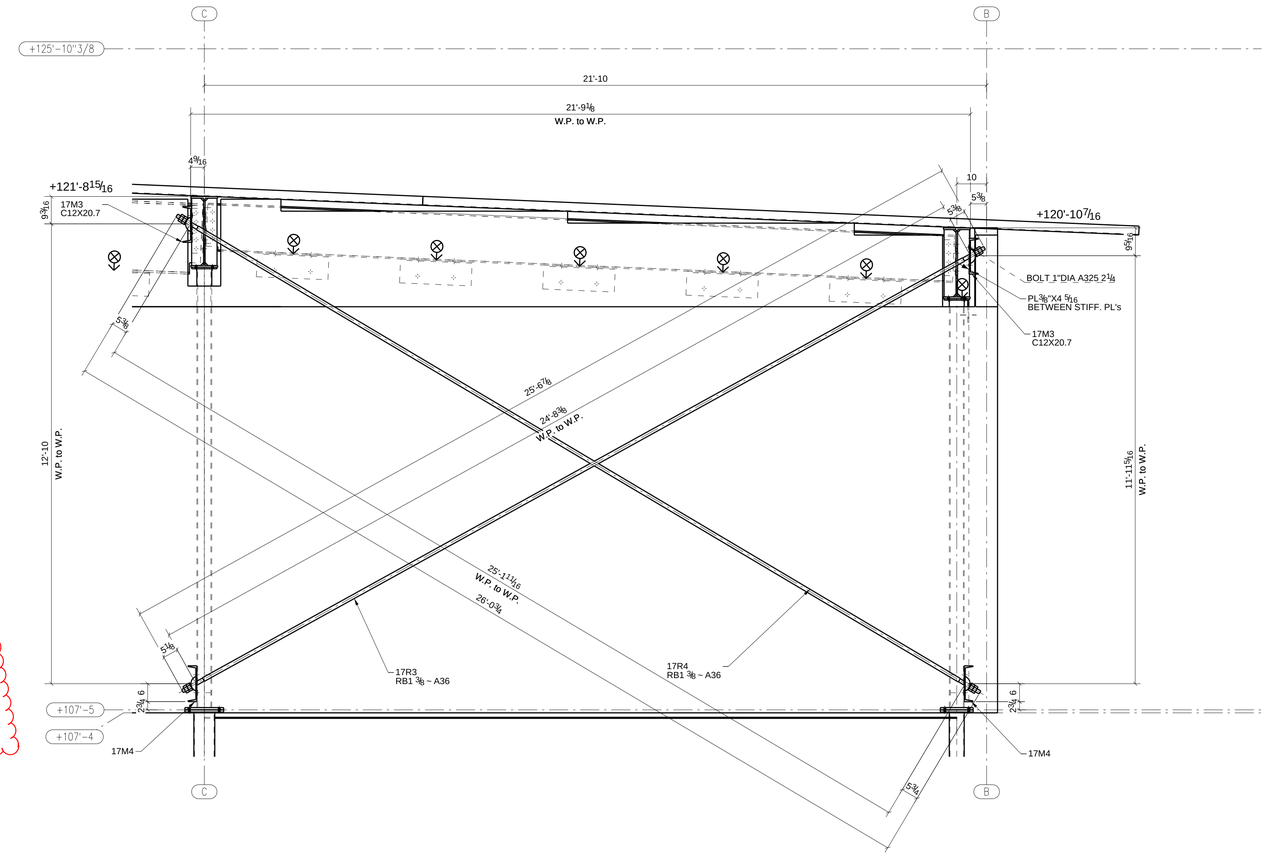

F - F
E304

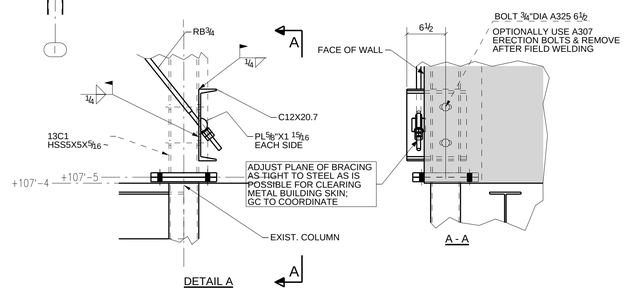

DETAIL A

A - A

REV.	DESCRIPTION	DATE	DWN	CHK
A	For Approval & Field Survey	8/30/10	TMc	TAN
0	For Approval & Field Survey	8/30/10	TMc	TAN

GENERAL NOTES

MATERIAL: A992 / A36 U/N
ELECTRODES: E70XX LH
REF. DRG.
HOLES: 13/16 DIA. U/N
CONN'S: -

SURFACE PREP.
AND PAINT:
SSPC-SP-2
GREY PRIMER DEVOE NA-195 (U.N.)

JOB USE
SHOP
APPROVAL

DESCRIPTION: JDC ADDITION~SECTIONS/ELEVATIONS

PROJ. NAME Hamilton High School Phase III
LOCATION Hamilton City School District - Hamilton, OH

CONTRACTOR GC Contracting
ARCH./ENG. SHP

Avenue Fabricating Inc.
1281 Clough Pike
Batavia, OH 45103
(513) 752-1911

DRAWN BY TMc
DATE 09/02/2010
CHKD. BY TAN
DATE
JOB No. 10-16
DRG. No. E310
REV. 0

GRID LOCATION	BOTTOM ELEVATION
4/K	107'-5"

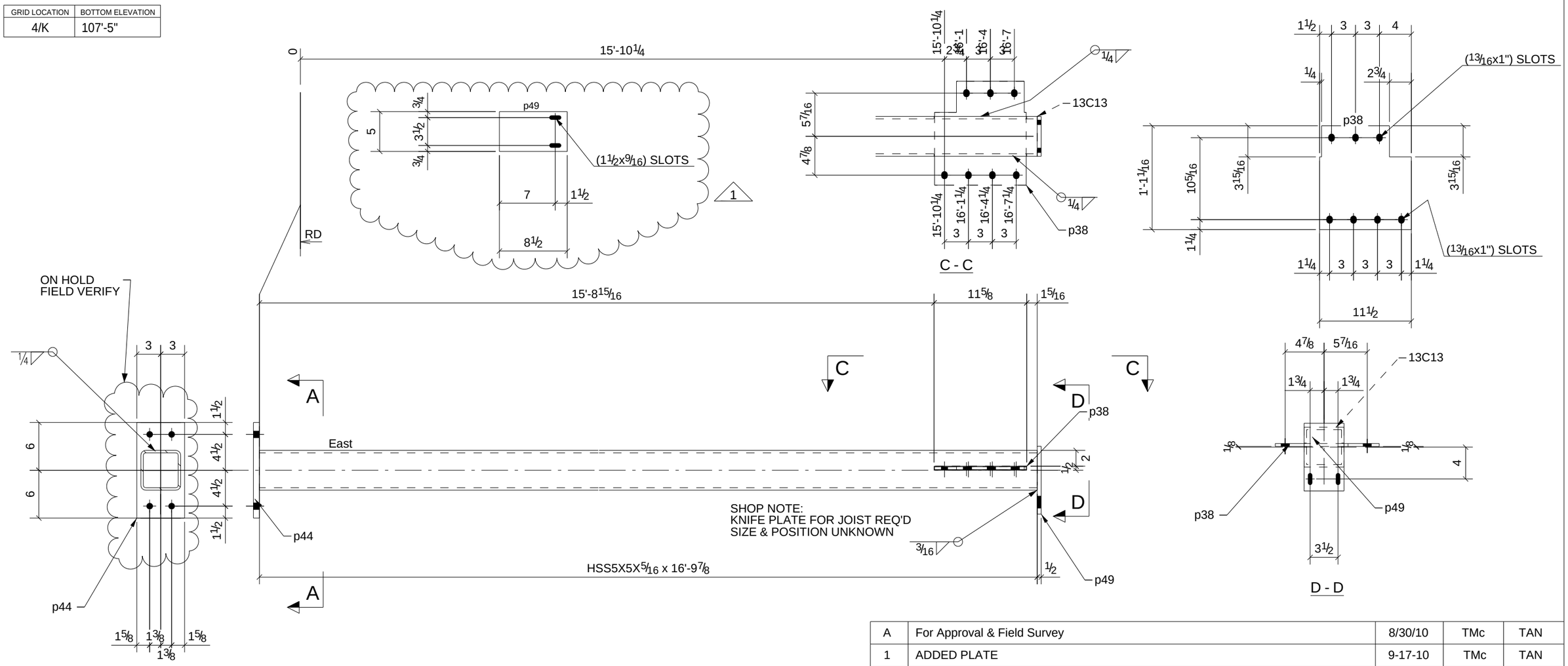

PHASE				
1	2	3	4	5
1	0	0	0	0

ONE - COLUMN - 13C13

REV.	DESCRIPTION	DATE	DWN	CHK
A	For Approval & Field Survey	8/30/10	TMc	TAN
1	ADDED PLATE	9-17-10	TMc	TAN
0	For Fabrication & F&F	9/15/10	TMc	TAN

GENERAL NOTES

MATERIAL: A992 / A36 | ELECTRODES: E70XX LH | REF. DRG.

HOLES: 13/16 DIA. U/N | CONN'S.: -

SURFACE PREP. AND PAINT: SSPC-SP-2 GREY PRIMER DEVOE NA-195 (U.N,)

JOB USE | SHOP | APPROVAL

DESCRIPTION: COLUMN

PROJECT NAME: Hamilton High School Phase III

LOCATION: Hamilton City School District - Hamilton

CONTRACTOR: GC Contracting

BILL OF MATERIAL

SHIP	MARK	NO PCS	DESCRIPTION	LENGTH	PIECE MARK	REMARKS
1	13C13	1	HSS5X5X5/16	16'-9 7/8"		SQ-2 A500-GR.B
		1	BAR3/8"X11 1/2"	1'-1 1/16"	p38	A36
		1	BAR3/4"X6"	1'-0"	p44	A36
		1	BAR1/2"X5"	0'-8 1/2"	p49	A36

Avenue Fabricating Inc.
1281 Clough Pike
Batavia, OH 45103
(513) 752-1911

DRAWN BY	DATE	
TMc	08/20/2010	
CHKD. BY	DATE	
TAN		
JOB No.	DRG. No.	REV.
10-16	13C13	3

GRID LOCATION	BOTTOM ELEVATION
2/K-L	107'-4"

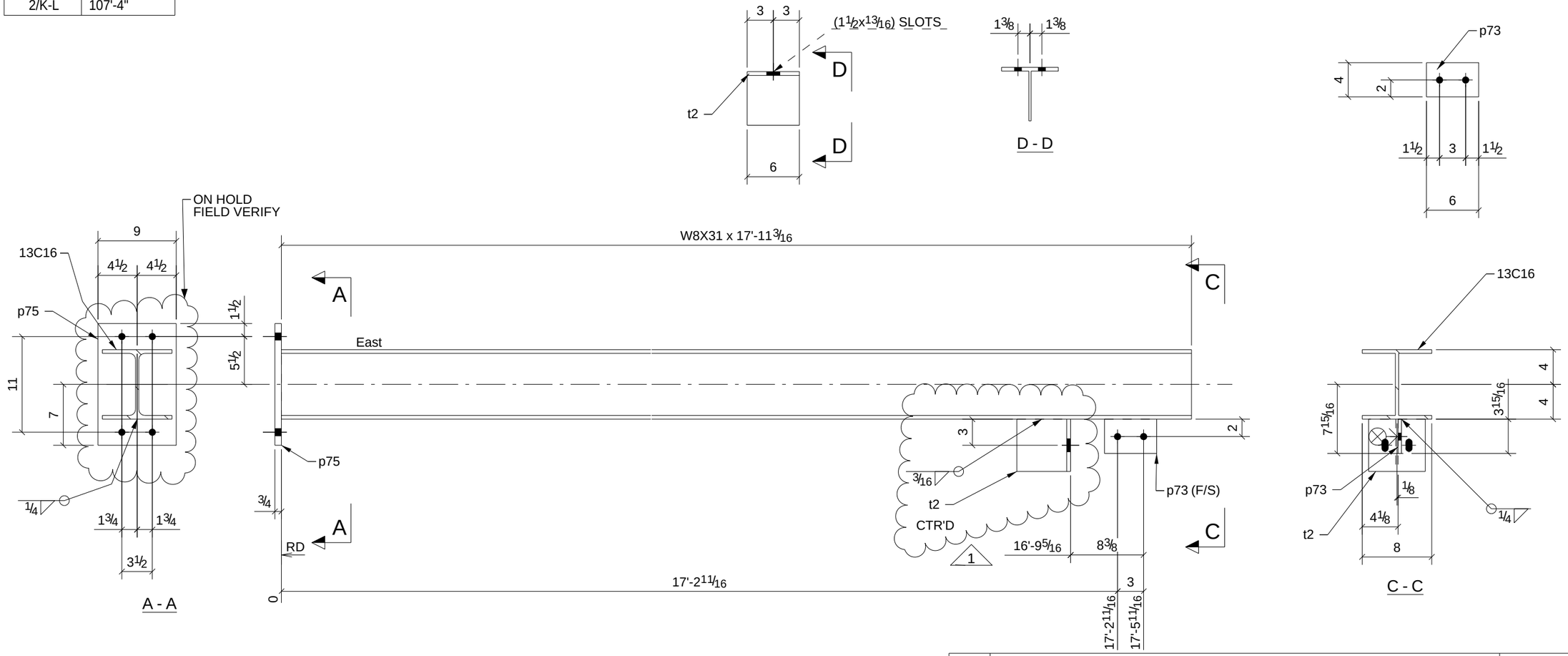

PHASE				
1	2	3	4	5
1	0	0	0	0

ONE - COLUMN - 13C16

W	8"x1/4"
F	8"x7/16"

REV.	DESCRIPTION	DATE	DWN	CHK
A	For Approval & Field Survey	8/30/10	TMc	TAN
1	added wt	9-17-10	TMc	TAN
0	For Fabrication & F&F	9/15/10	TMc	TAN

GENERAL NOTES

MATERIAL: A992 / A36 ELECTRODES: E70XX LH REF. DRG.

HOLES: 13/16 DIA. U/N CONN'S.: -

SURFACE PREP. AND PAINT: SSPC-SP-2 GREY PRIMER DEVOE NA-195 (U.N,)

JOB USE

SHOP

APPROVAL

DESCRIPTION: COLUMN

PROJECT NAME Hamilton High School Phase III

LOCATION Hamilton City School District - Hamilton

CONTRACTOR GC Contracting

BILL OF MATERIAL

SHIP	MARK	NO PCS	DESCRIPTION	LENGTH	PIECE MARK	REMARKS
1	13C16	1	W8X31	17'-11 3/16"		SQ-2 A992
		1	PL3/8"X3 15/16"	0'-6"	p73	A36
		1	BAR3/4"X9"	1'-2"	p75	A36
		1	WT6X15	0'-6"	t2	A36

Avenue Fabricating Inc.
1281 Clough Pike
Batavia, OH 45103
(513) 752-1911

DRAWN BY TMc	DATE 08/20/2010
CHKD. BY TAN	DATE
JOB No. 10-16	DRG. No. 13C16 REV. 3

GRID LOCATION	BOTTOM ELEVATION
29-28/M	107'-4"

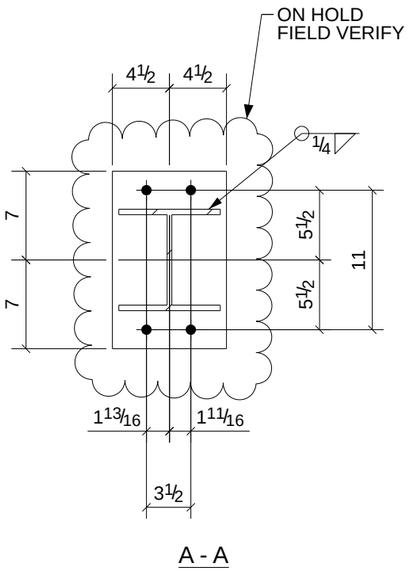

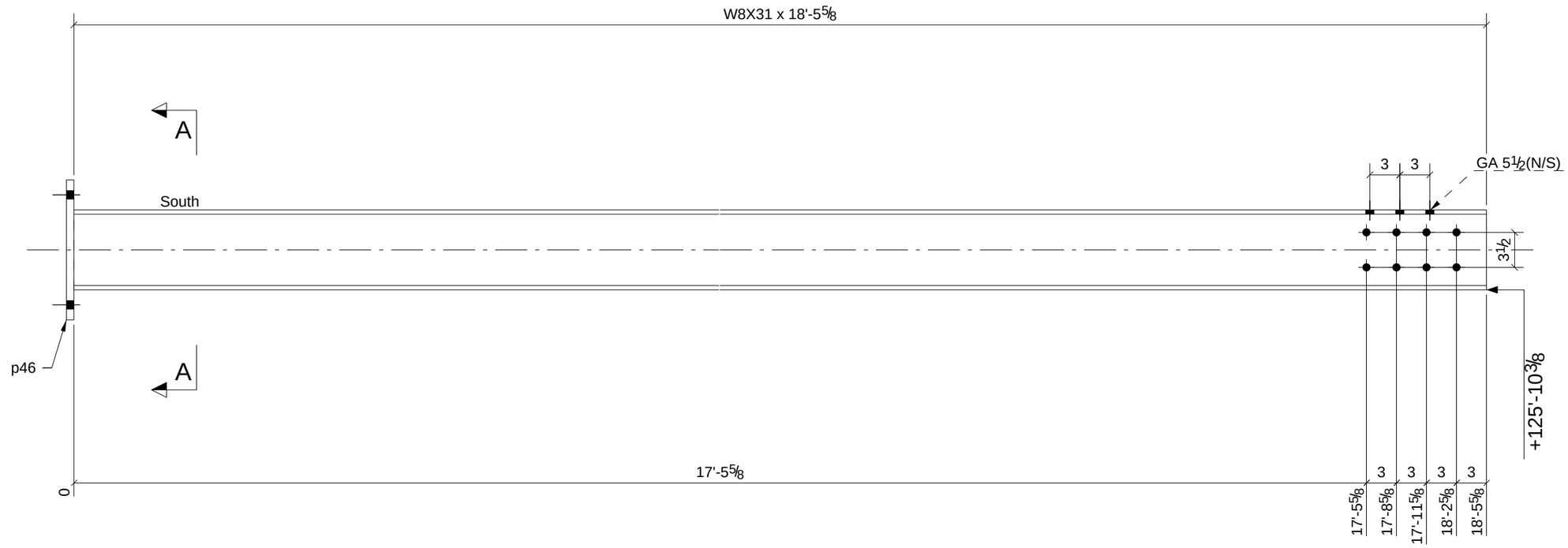

REV.	DESCRIPTION	DATE	DWN	CHK
A	For Approval & Field Survey	8/30/10	TMc	TAN
0	For Fabrication & F&F	9/15/10	TMc	TAN

ONE - COLUMN - 13C18

PHASE				
1	2	3	4	5
1	0	0	0	0

W	8"x 1/4"
F	8"x 7/16"

GENERAL NOTES

MATERIAL: A992 / A36
ELECTRODES: E70XX LH
REF. DRG.
HOLES: 13/16 DIA. U/N
CONN'S.: -
SURFACE PREP. AND PAINT: SSPC-SP-2 GREY PRIMER DEVOE NA-195 (U.N,)

JOB USE
SHOP
APPROVAL

DESCRIPTION: COLUMN
PROJECT NAME: Hamilton High School Phase III
LOCATION: Hamilton City School District - Hamilton
CONTRACTOR: GC Contracting

BILL OF MATERIAL

SHIP	MARK	NO PCS	DESCRIPTION	LENGTH	PIECE MARK	REMARKS
1	13C18	1	W8X31	18'-5 5/8"		SQ-2 A992
		1	FL3/4"X9"	1'-2"	p46	A36

Avenue Fabricating Inc.
1281 Clough Pike
Batavia, OH 45103
(513) 752-1911

DRAWN BY	DATE	
TMc	09/02/2010	
CHKD. BY	DATE	
TAN		
JOB No.	DRG. No.	REV.
10-16	13C18	2

GRID LOCATION	BOTTOM ELEVATION
29/K-L	107'-4"

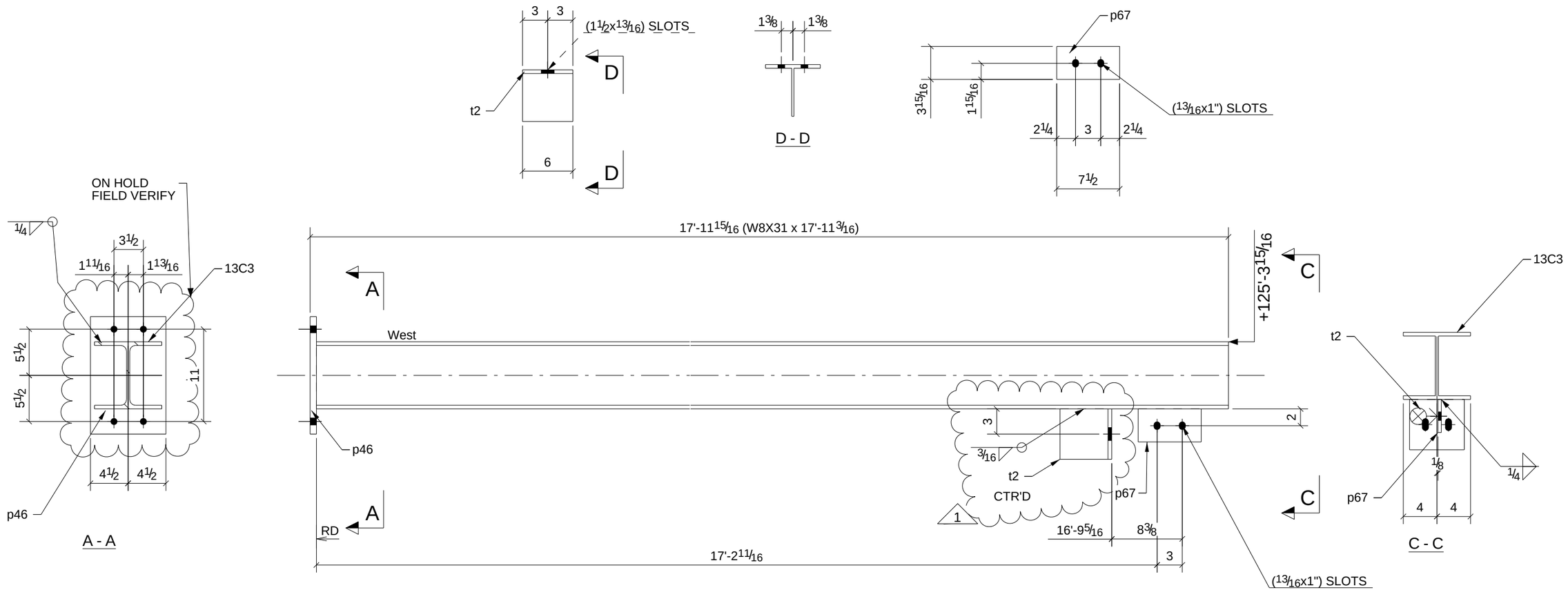

ONE - COLUMN - 13C3

PHASE				
1	2	3	4	5
1	0	0	0	0

W	8"x1/4"
F	8"x7/16"

REV.	DESCRIPTION	DATE	DWN	CHK
A	For Approval & Field Survey	8/30/10	TMc	TAN
1	added wt	9-17-10	TMc	TAN
0	For Fabrication & F&F	9/15/10	TMc	TAN

GENERAL NOTES

MATERIAL: A992 / A36
ELECTRODES: E70XX LH
REF. DRG.
HOLES: 13/16 DIA. U/N
CONN'S.: -
SURFACE PREP. AND PAINT: SSPC-SP-2 GREY PRIMER DEVOE NA-195 (U.N,)

JOB USE
SHOP
APPROVAL

DESCRIPTION: COLUMN
PROJECT NAME: Hamilton High School Phase III
LOCATION: Hamilton City School District - Hamilton
CONTRACTOR: GC Contracting

BILL OF MATERIAL

SHIP	MARK	NO PCS	DESCRIPTION	LENGTH	PIECE MARK	REMARKS
1	13C3	1	W8X31	17'-11 3/16"		SQ-2 A992
		1	BAR3/4"X9"	1'-2"	p46	A36
		1	PL3/8"X3 15/16"	0'-7 1/2"	p67	A36
		1	WT6X15	0'-6"	t2	A36

Avenue Fabricating Inc.
1281 Clough Pike
Batavia, OH 45103
(513) 752-1911

DRAWN BY TMc	DATE 08/20/2010
CHKD. BY TAN	DATE
JOB No. 10-16	DRG. No. 13C3 / REV. 3

GRID LOCATION	BOTTOM ELEVATION
3-2/M	107'-4"

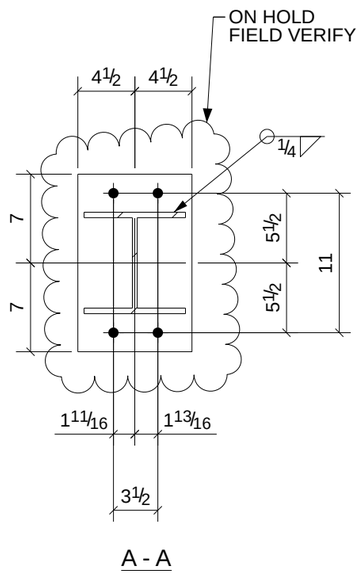

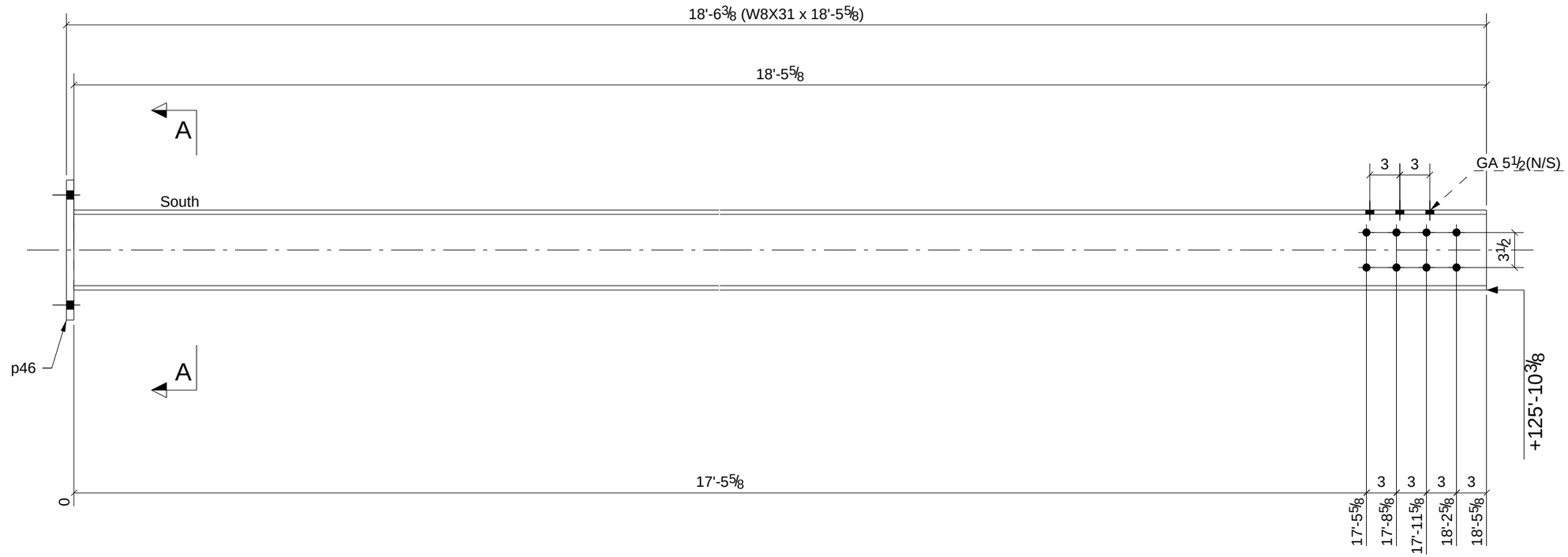

REV.	DESCRIPTION	DATE	DWN	CHK
A	For Approval & Field Survey	8/30/10	TMc	TAN
0	For Fabrication & F&F	9/15/10	TMc	TAN

ONE - COLUMN - 13C4

PHASE				
1	2	3	4	5
1	0	0	0	0

W	8"x 1/4"
F	8"x 7/16"

GENERAL NOTES

MATERIAL: A992 / A36
ELECTRODES: E70XX LH
REF. DRG.
HOLES: 13/16 DIA. U/N
CONN'S.: -
SURFACE PREP. AND PAINT: SSPC-SP-2 GREY PRIMER DEVOE NA-195 (U.N,)

JOB USE
SHOP
APPROVAL

DESCRIPTION: COLUMN
PROJECT NAME: Hamilton High School Phase III
LOCATION: Hamilton City School District - Hamilton
CONTRACTOR: GC Contracting

BILL OF MATERIAL

SHIP	MARK	NO PCS	DESCRIPTION	LENGTH	PIECE MARK	REMARKS
1	13C4	1	W8X31	18'-5 5/8"		SQ-2 A992
		1	FL3/4"X9"	1'-2"	p46	A36

Avenue Fabricating Inc.
1281 Clough Pike
Batavia, OH 45103
(513) 752-1911

DRAWN BY	DATE	
TMc	08/20/2010	
CHKD. BY	DATE	
TAN		
JOB No.	DRG. No.	REV.
10-16	13C4	2

GRID LOCATION	BOTTOM ELEVATION
27/B	107'-5"

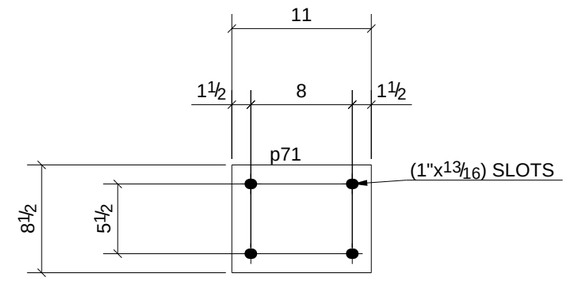

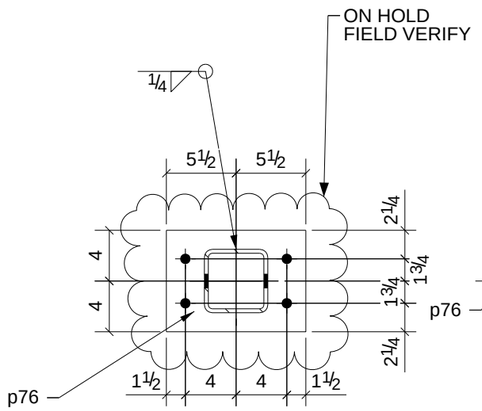

A - A

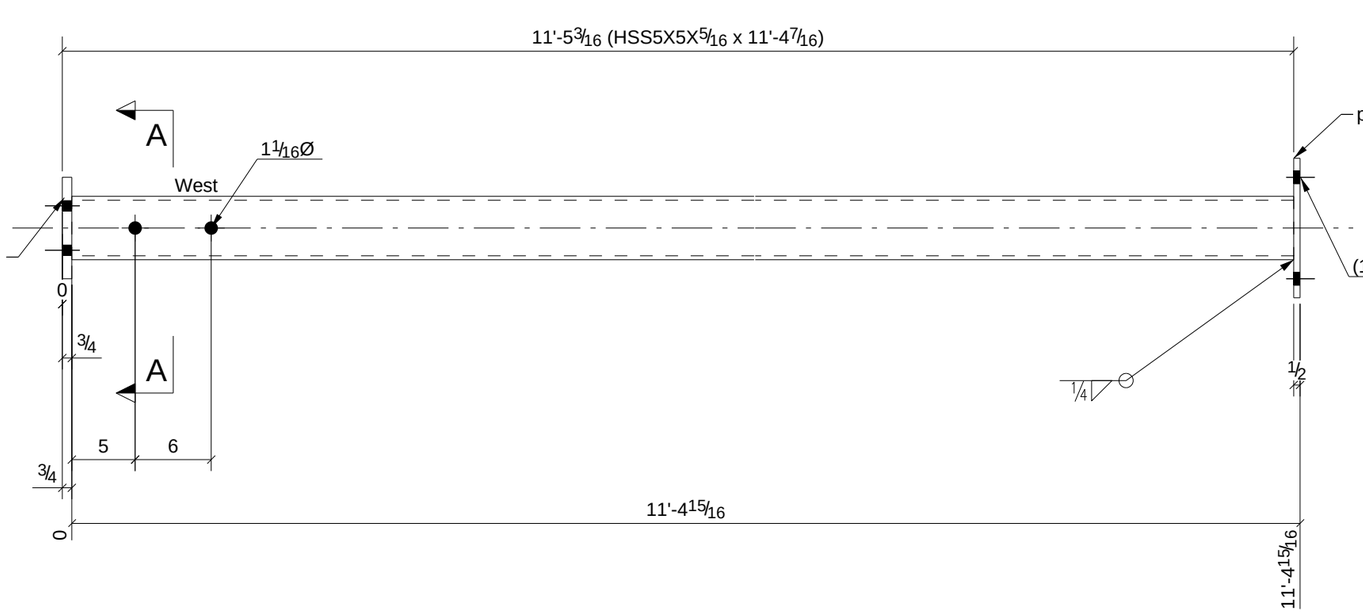

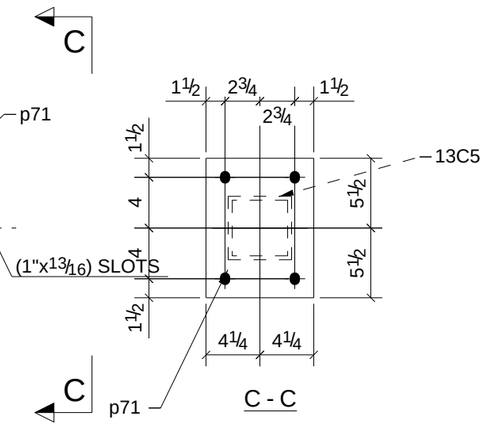

C - C

REV.	DESCRIPTION	DATE	DWN	CHK
A	For Approval & Field Survey	8/30/10	TMc	TAN
0	For Fabrication & F&F	9/15/10	TMc	TAN

ONE - COLUMN - 13C5

PHASE				
1	2	3	4	5
1	0	0	0	0

GENERAL NOTES

MATERIAL: A992 / A36
ELECTRODES: E70XX LH
REF. DRG.
HOLES: 13/16 DIA. U/N
CONN'S.: -
SURFACE PREP. AND PAINT: SSPC-SP-2 GREY PRIMER DEVOE NA-195 (U.N,)

JOB USE
SHOP
APPROVAL

DESCRIPTION: COLUMN
PROJECT NAME: Hamilton High School Phase III
LOCATION: Hamilton City School District - Hamilton
CONTRACTOR: GC Contracting

BILL OF MATERIAL

SHIP	MARK	NO PCS	DESCRIPTION	LENGTH	PIECE MARK	REMARKS
1	13C5	1	HSS5X5X5/16	11'-4 7/16"		SQ-2 A500-GR.B
		1	FL1/2"X8 1/2"	0'-11"	p71	A36
		1	FL3/4"X8"	0'-11"	p76	A36

Avenue Fabricating Inc.
1281 Clough Pike
Batavia, OH 45103
(513) 752-1911

DRAWN BY	DATE	
TMc	08/20/2010	
CHKD. BY	DATE	
TAN		
JOB No.	DRG. No.	REV.
10-16	13C5	2

GRID LOCATION	BOTTOM ELEVATION
27/K	107'-5"

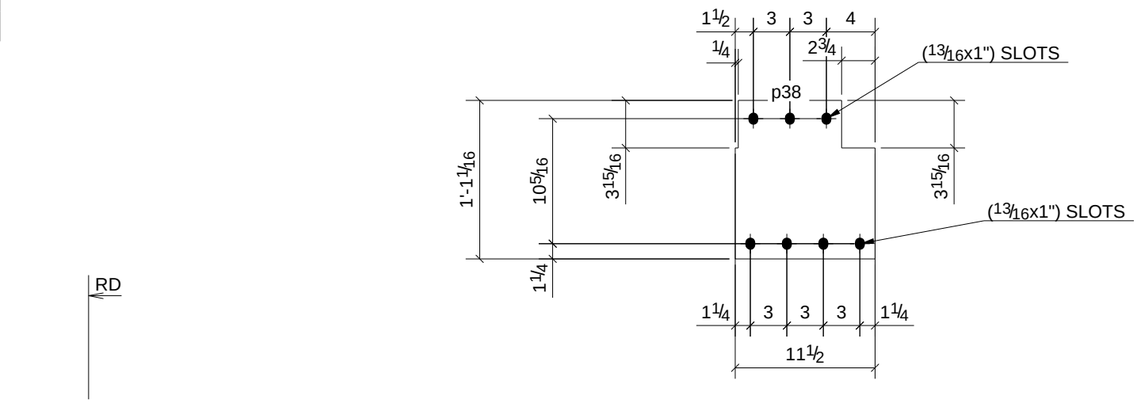

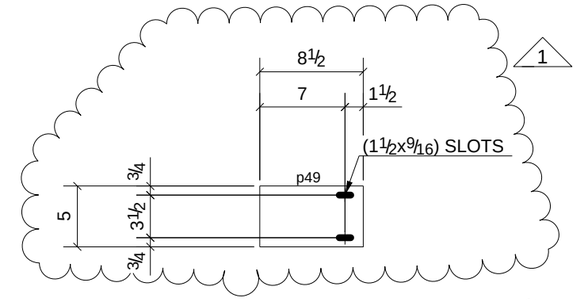

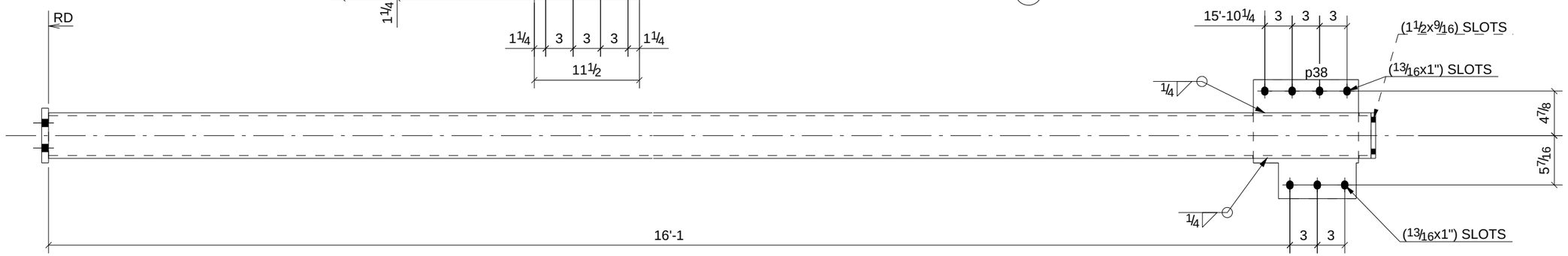

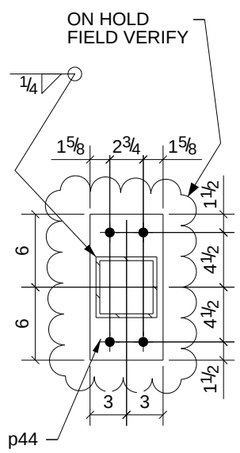

A - A

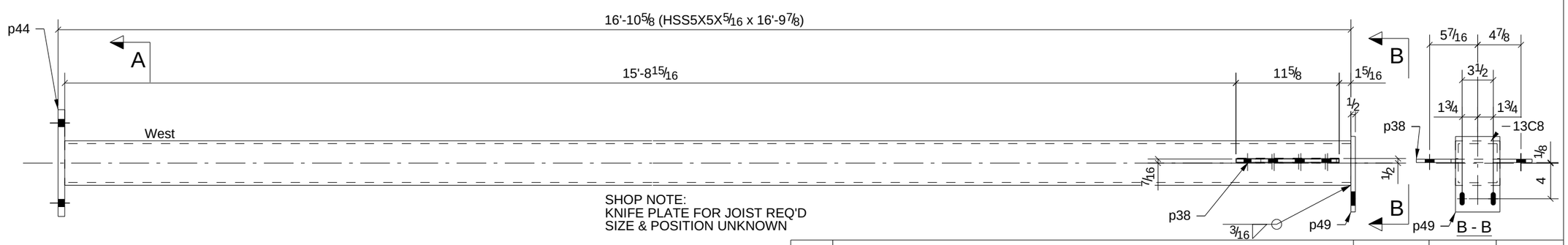

SHOP NOTE:
KNIFE PLATE FOR JOIST REQ'D
SIZE & POSITION UNKNOWN

PHASE				
1	2	3	4	5
1	0	0	0	0

ONE - COLUMN - 13C8

REV.	DESCRIPTION	DATE	DWN	CHK
A	For Approval & Field Survey	8/30/10	TMc	TAN
1	ADDED PLATE	9-17-10	TMc	TAN
0	For Fabrication & F&F	9/15/10	TMc	TAN

GENERAL NOTES

MATERIAL: A992 / A36
ELECTRODES: E70XX LH
REF. DRG.
HOLES: 13/16 DIA. U/N
CONN'S.: -
SURFACE PREP. AND PAINT: SSPC-SP-2 GREY PRIMER DEVOE NA-195 (U.N,)

JOB USE
SHOP
APPROVAL

DESCRIPTION: COLUMN
PROJECT NAME: Hamilton High School Phase III
LOCATION: Hamilton City School District - Hamilton
CONTRACTOR: GC Contracting

BILL OF MATERIAL

SHIP	MARK	NO PCS	DESCRIPTION	LENGTH	PIECE MARK	REMARKS
1	13C8	1	HSS5X5X5/16	16'-9 7/8"		SQ-2 A500-GR.B
		1	BAR3/8"X11 1/2"	1'-1 1/16"	p38	A36
		1	BAR3/4"X6"	1'-0"	p44	A36
		1	BAR1/2"X5"	0'-8 1/2"	p49	A36

Avenue Fabricating Inc.
1281 Clough Pike
Batavia, OH 45103
(513) 752-1911

DRAWN BY	DATE	
TMc	08/20/2010	
CHKD. BY	DATE	
TAN		
JOB No.	DRG. No.	REV.
10-16	13C8	3

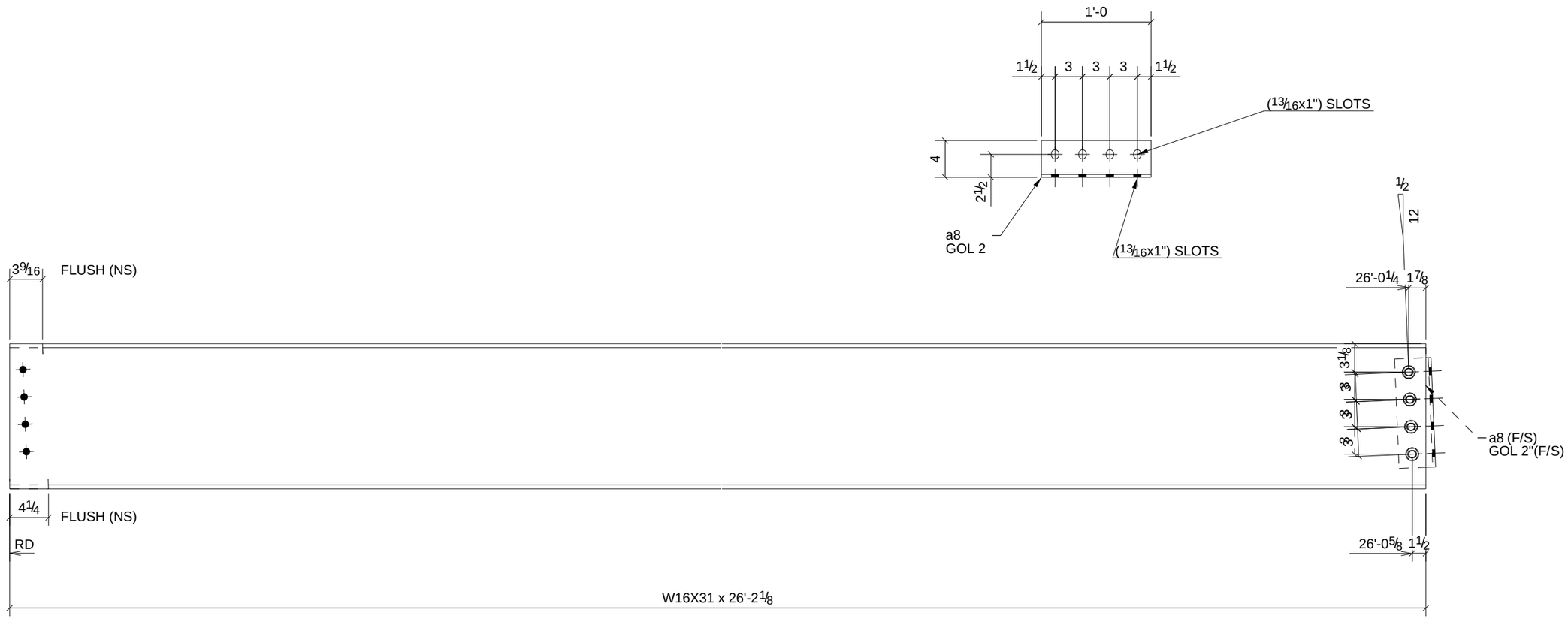

ONE - BEAM - 15B1

PHASE				
1	2	3	4	5
1	0	0	0	0

W	15 7/8"x1/4"
F	5 1/2"x7/16"

REV.	DESCRIPTION	DATE	DWN	CHK
0	For Fabrication & F&F	9/15/10	TMc	TAN

GENERAL NOTES

MATERIAL: A992 / A36
ELECTRODES: E70XX LH
REF. DRG.
HOLES: 13/16 DIA. U/N
CONN'S.: -
SURFACE PREP. AND PAINT: SSPC-SP-2 GREY PRIMER DEVOE NA-195 (U.N,)

JOB USE
SHOP
APPROVAL

DESCRIPTION: BEAM
PROJECT NAME: Hamilton High School Phase III
LOCATION: Hamilton City School District - Hamilton
CONTRACTOR: GC Contracting

BILL OF MATERIAL

SHIP	MARK	NO PCS	DESCRIPTION	LENGTH	PIECE MARK	REMARKS
1	15B1	1	W16X31	26'-2 1/8"		SQ-2 A992
		1	L4X3-1/2X5/16	1'-0"	a8	A36
		1	BAR3/4"X5 1/2"	0'-5 1/2"	p9	A36
		4	3/4"Ø A325N BOLT	0'-1 3/4"		

Avenue Fabricating Inc.
1281 Clough Pike
Batavia, OH 45103
(513) 752-1911

DRAWN BY	DATE	
TMc	09/14/2010	
CHKD. BY	DATE	
TAN		
JOB No.	DRG. No.	REV.
10-16	15B1	1

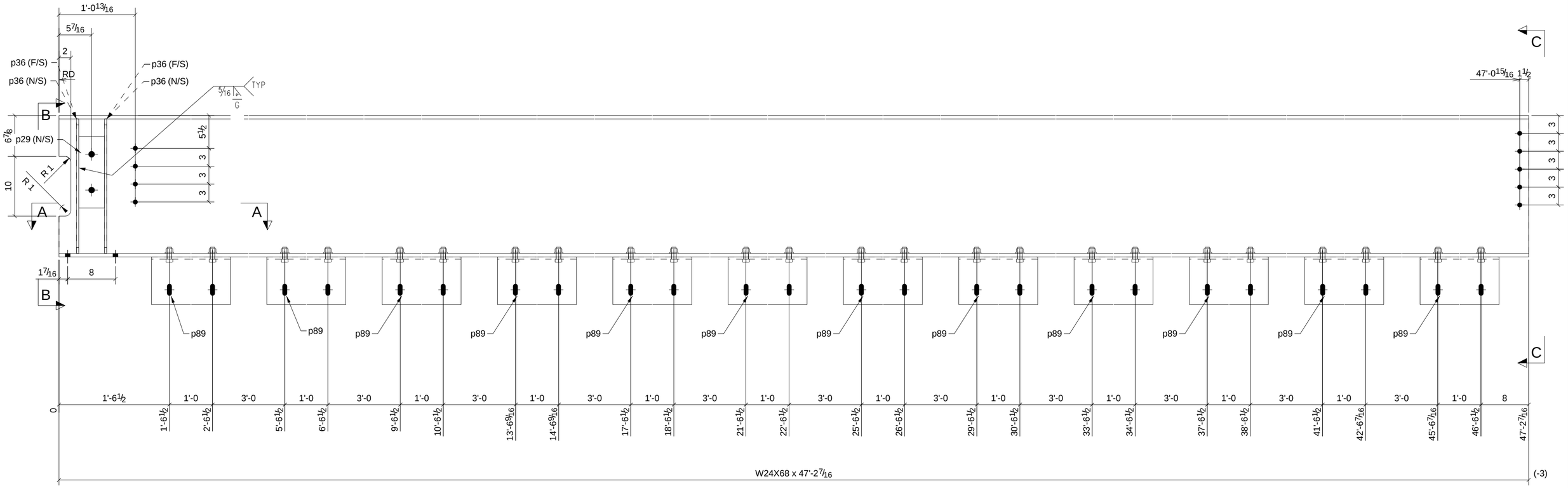

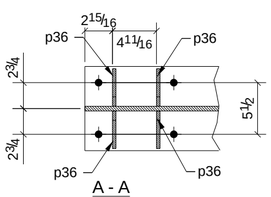

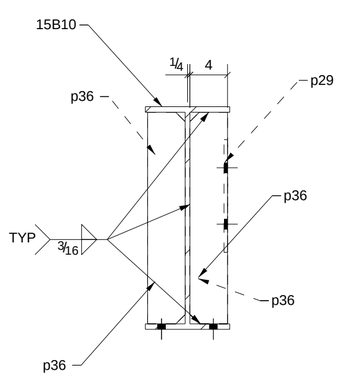

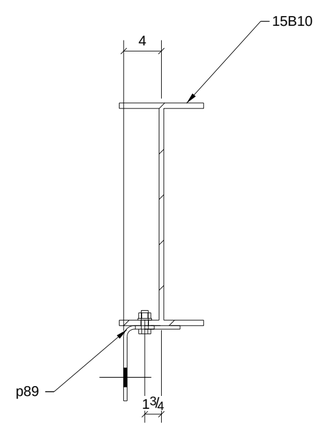

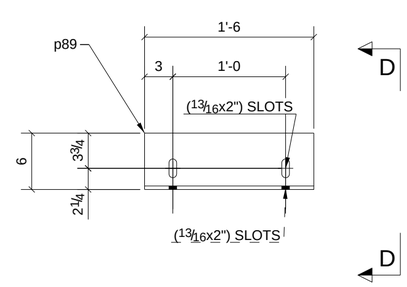

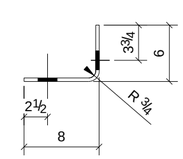

ONE - BEAM - 15B10

PHASE				
1	2	3	4	5
1	0	0	0	0

W	23 11/16"x 7/16"
F	9"x 9/16"

REV.	DESCRIPTION	DATE	DWN	CHK
A	For Approval & Field Survey	8/30/10	TMc	TAN
0	For Fabrication & F&F	9/15/10	TMc	TAN

GENERAL NOTES

MATERIAL: A992 / A36 ELECTRODES: E70XX LH REF. DRG.

HOLES: 13/16 DIA. U/N CONN'S.: -

SURFACE PREP. AND PAINT: SSPC-SP-2 GREY PRIMER DEVOE NA-195 (U.N,)

JOB USE

SHOP

APPROVAL

BILL OF MATERIAL

SHIP	MARK	NO PCS	DESCRIPTION	LENGTH	PIECE MARK	REMARKS
1	15B10	1	W24X68	47'-2 7/16"		SQ-2 A992
		1	PL3/8"X4 5/16"	1'-0"	p29	A36
		4	BAR3/8"X4"	1'-10 1/2"	p36	A36
		12	PL3/8"X13 1/4"	1'-6"	p89	A36
		24	3/4"Ø A307 BOLT	0'-2"		

DESCRIPTION: BEAM

PROJECT NAME Hamilton High School Phase III

LOCATION Hamilton City School District - Hamilton

CONTRACTOR GC Contracting

Avenue Fabricating Inc.
1281 Clough Pike
Batavia, OH 45103
(513) 752-1911

DRAWN BY	DATE	
TMc	08/30/2010	
CHKD. BY	DATE	
TAN		
JOB No.	DRG. No.	REV.
10-16	15B10	2

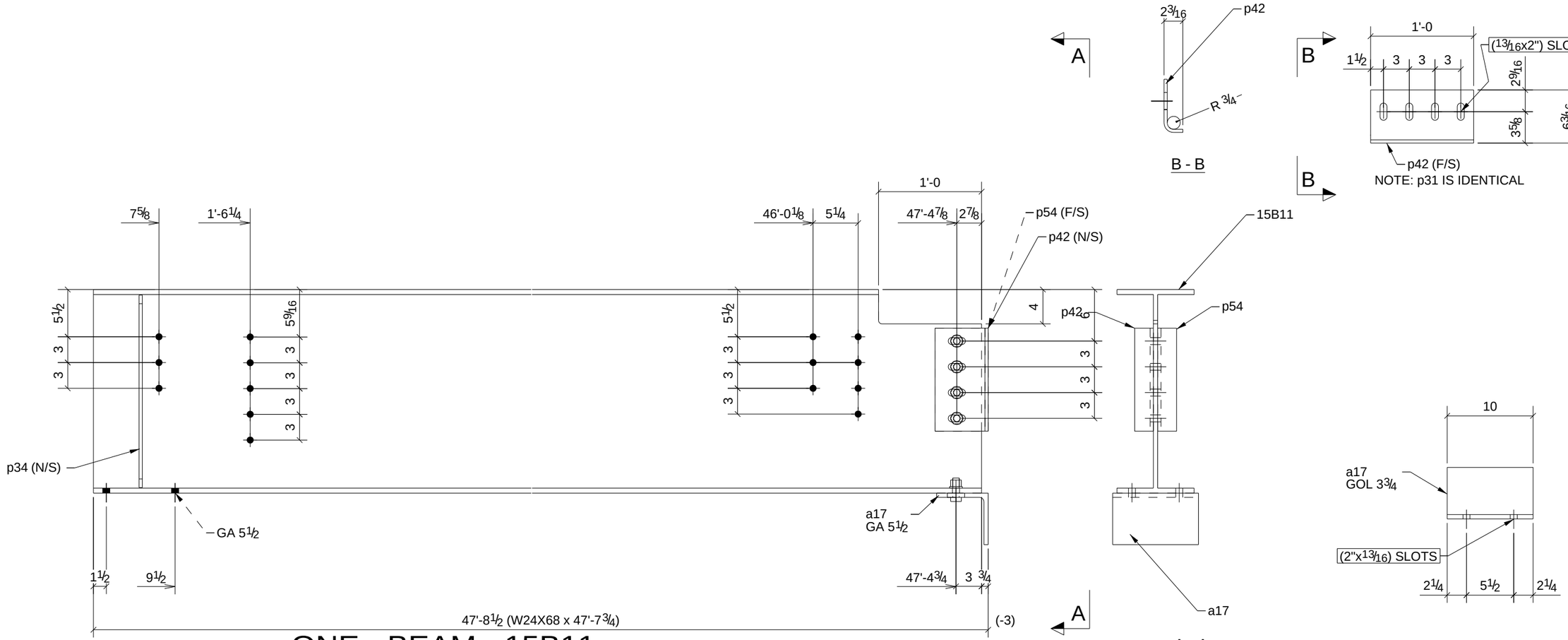

PHASE				
1	2	3	4	5
1	0	0	0	0

W	23 11/16"x7/16"
F	9"x9/16"

REV.	DESCRIPTION	DATE	DWN	CHK
A	For Approval & Field Survey	8/30/10	TMc	TAN
0	For Fabrication & F&F	9/15/10	TMc	TAN

BILL OF MATERIAL

SHIP	MARK	NO PCS	DESCRIPTION	LENGTH	PIECE MARK	REMARKS
1	15B11	1	W24X68	47'-7 3/4"		SQ-2 A992
		1	L6X6X1/2	0'-10"	a17	A36
		1	BAR3/8"X4"	1'-10 3/8"	p34	A36
		1	PL3/8"X7 5/8"	1'-0"	p42	A36 BENT
		1	PL3/8"X7 5/8"	1'-0"	p69	A36 BENT
		2	3/4"Ø A325N BOLT	0'-2 1/4"		
		4	3/4"Ø A325N BOLT	0'-2 1/2"		

GENERAL NOTES

MATERIAL: A992 / A36
ELECTRODES: E70XX LH
REF. DRG.
HOLES: 13/16 DIA. U/N
CONN'S.: -
SURFACE PREP. AND PAINT: SSPC-SP-2 GREY PRIMER DEVOE NA-195 (U.N,)

JOB USE
SHOP
APPROVAL

DESCRIPTION: BEAM
PROJECT NAME: Hamilton High School Phase III
LOCATION: Hamilton City School District - Hamilton
CONTRACTOR: GC Contracting

Avenue Fabricating Inc.
1281 Clough Pike
Batavia, OH 45103
(513) 752-1911

DRAWN BY	DATE	
TMc	08/30/2010	
CHKD. BY	DATE	
TAN		
JOB No.	DRG. No.	REV.
10-16	15B11	2

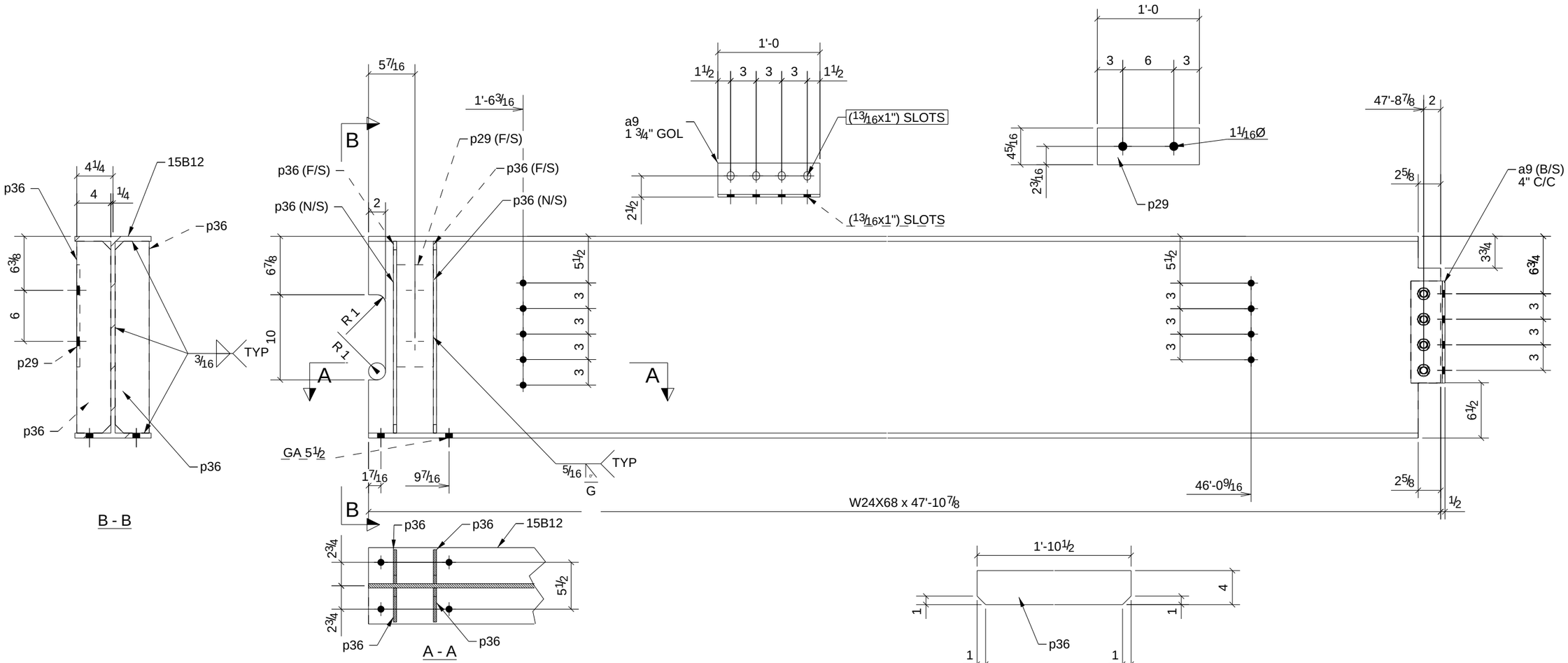

ONE - BEAM - 15B12

PHASE				
1	2	3	4	5
1	0	0	0	0

W	23 11/16"x 7/16"
F	9"x 9/16"

REV.	DESCRIPTION	DATE	DWN	CHK
A	For Approval & Field Survey	8/30/10	TMc	TAN
0	For Fabrication & F&F	9/15/10	TMc	TAN

GENERAL NOTES

MATERIAL: A992 / A36
ELECTRODES: E70XX LH
REF. DRG.
HOLES: 13/16 DIA. U/N
CONN'S.: -
SURFACE PREP. AND PAINT: SSPC-SP-2 GREY PRIMER DEVOE NA-195 (U.N,)

JOB USE
SHOP
APPROVAL

BILL OF MATERIAL

SHIP	MARK	NO PCS	DESCRIPTION	LENGTH	PIECE MARK	REMARKS
1	15B12	1	W24X68	47'-10 7/8"		SQ-2 A992
		2	L4X3-1/2X5/16	1'-0"	a9	A36
		1	PL3/8"X4 5/16"	1'-0"	p29	A36
		4	BAR3/8"X4"	1'-10 1/2"	p36	A36
		4	3/4"Ø A325N BOLT	0'-2 1/4"		

DESCRIPTION: BEAM
PROJECT NAME: Hamilton High School Phase III
LOCATION: Hamilton City School District - Hamilton
CONTRACTOR: GC Contracting

Avenue Fabricating Inc.
1281 Clough Pike
Batavia, OH 45103
(513) 752-1911

DRAWN BY	DATE	
TMc	08/30/2010	
CHKD. BY	DATE	
TAN		
JOB No.	DRG. No.	REV.
10-16	15B12	2

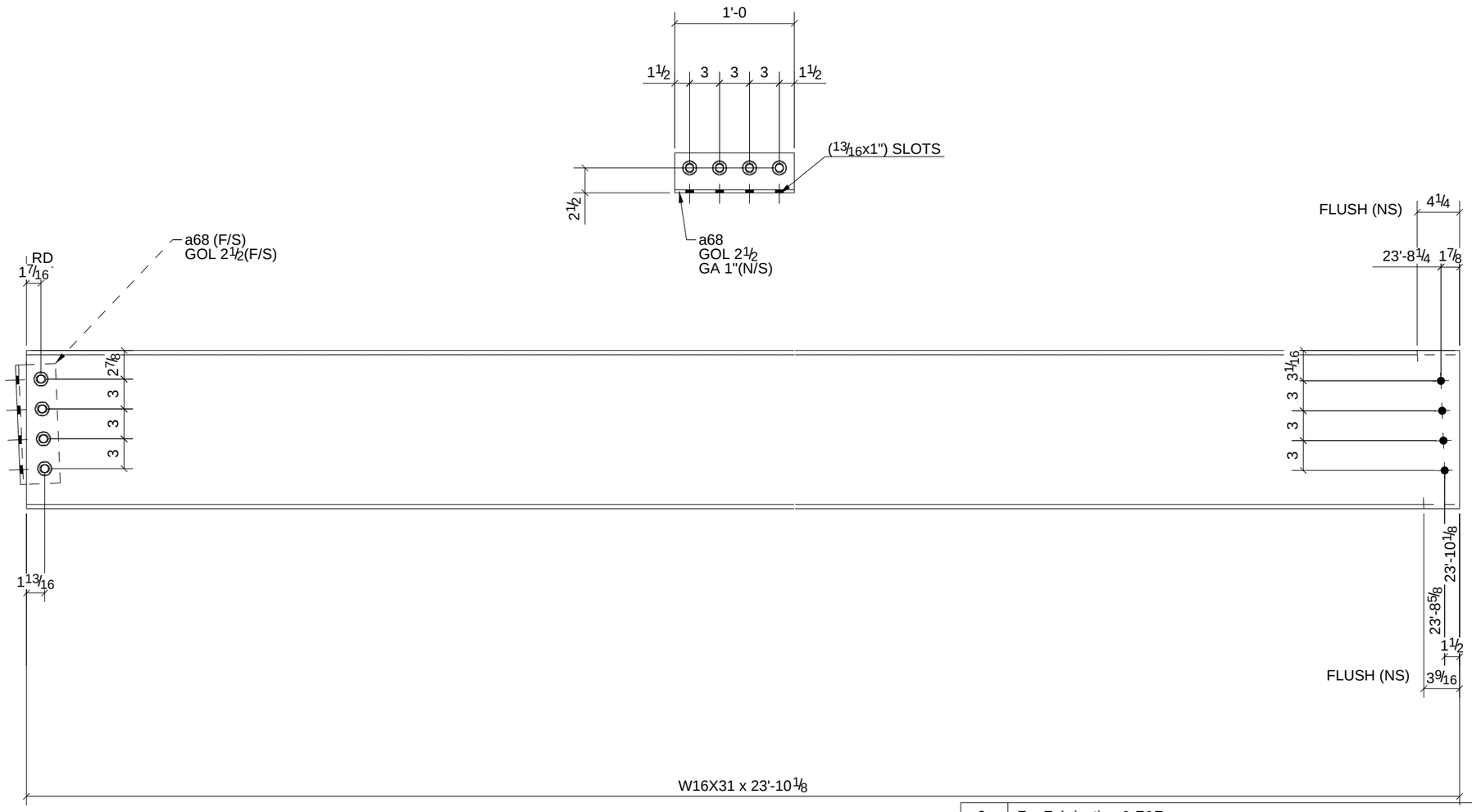

ONE - BEAM - 15B13

PHASE				
1	2	3	4	5
1	0	0	0	0

W	15 7/8"x1/4"
F	5 1/2"x7/16"

REV.	DESCRIPTION	DATE	DWN	CHK
0	For Fabrication & F&F	9/15/10	TMc	TAN

GENERAL NOTES

MATERIAL: A992 / A36
ELECTRODES: E70XX LH
REF. DRG.
HOLES: 13/16 DIA. U/N
CONN'S.: -
SURFACE PREP. AND PAINT: SSPC-SP-2 GREY PRIMER DEVOE NA-195 (U.N,)

JOB USE
SHOP
APPROVAL

DESCRIPTION: BEAM
PROJECT NAME: Hamilton High School Phase III
LOCATION: Hamilton City School District - Hamilton
CONTRACTOR: GC Contracting

BILL OF MATERIAL

SHIP	MARK	NO PCS	DESCRIPTION	LENGTH	PIECE MARK	REMARKS
1	15B13	1	W16X31	23'-10 1/8"		SQ-2 A992
		1	L4X4X5/16	1'-0"	a68	A36
		4	3/4"Ø A325N BOLT	0'-1 3/4"		

Avenue Fabricating Inc.
1281 Clough Pike
Batavia, OH 45103
(513) 752-1911

DRAWN BY TMc	DATE 08/30/2010		
CHKD. BY TAN	DATE		
JOB No. 10-16	DRG. No. 15B13	REV. 1	

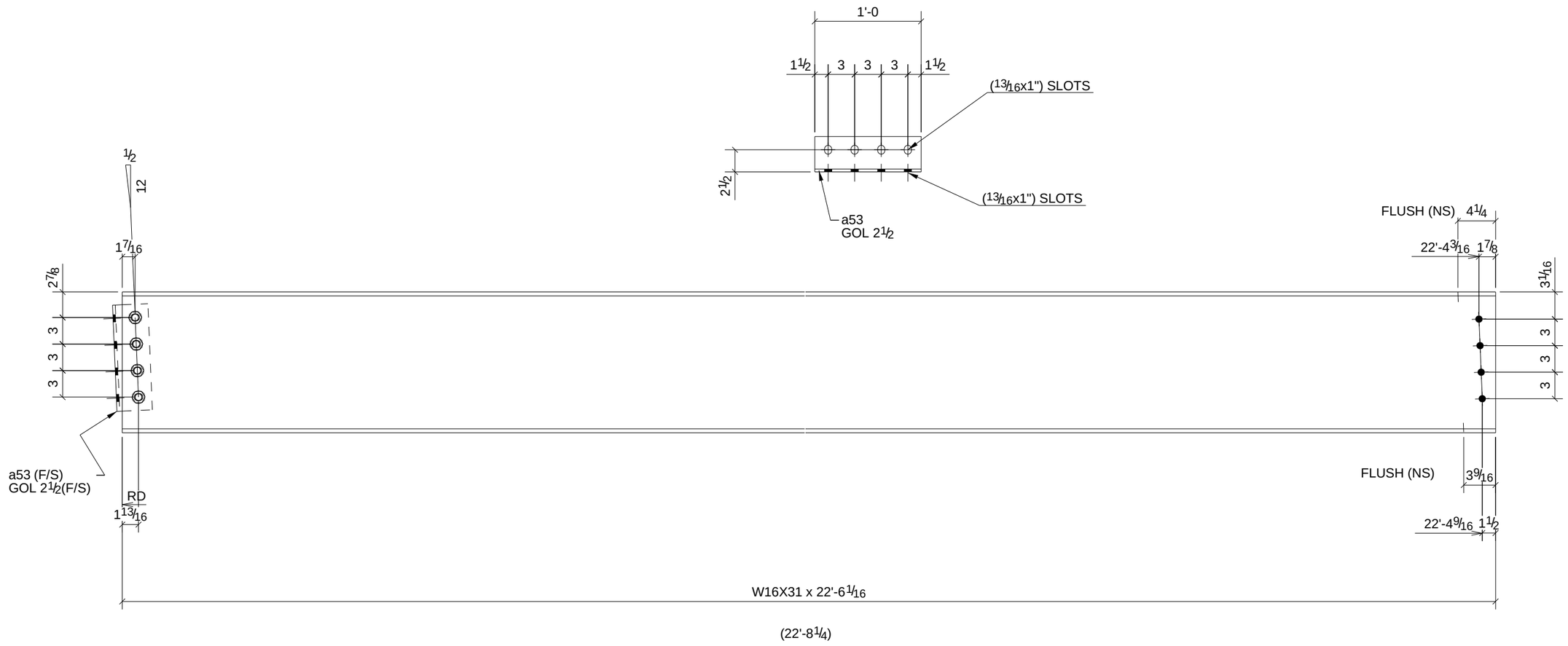

ONE - BEAM - 15B14

PHASE				
1	2	3	4	5
1	0	0	0	0

W	15 7/8"x1/4"
F	5 1/2"x7/16"

REV.	DESCRIPTION	DATE	DWN	CHK
A	For Approval & Field Survey	8/30/10	TMc	TAN
0	For Fabrication & F&F	9/15/10	TMc	TAN

GENERAL NOTES

MATERIAL: A992 / A36
ELECTRODES: E70XX LH
REF. DRG.
HOLES: 13/16 DIA. U/N
CONN'S.: -
SURFACE PREP. AND PAINT: SSPC-SP-2 GREY PRIMER DEVOE NA-195 (U.N,)

JOB USE
SHOP
APPROVAL

DESCRIPTION: BEAM
PROJECT NAME: Hamilton High School Phase III
LOCATION: Hamilton City School District - Hamilton
CONTRACTOR: GC Contracting

BILL OF MATERIAL

SHIP	MARK	NO PCS	DESCRIPTION	LENGTH	PIECE MARK	REMARKS
1	15B14	1	W16X31	22'-6 1/16"		SQ-2 A992
		1	L4X4X5/16	1'-0"	a53	A36
		4	3/4"Ø A325N BOLT	0'-1 3/4"		

Avenue Fabricating Inc.
1281 Clough Pike
Batavia, OH 45103
(513) 752-1911

DRAWN BY TMc	DATE 08/30/2010
CHKD. BY TAN	DATE
JOB No. 10-16	DRG. No. 15B14 / REV. 2

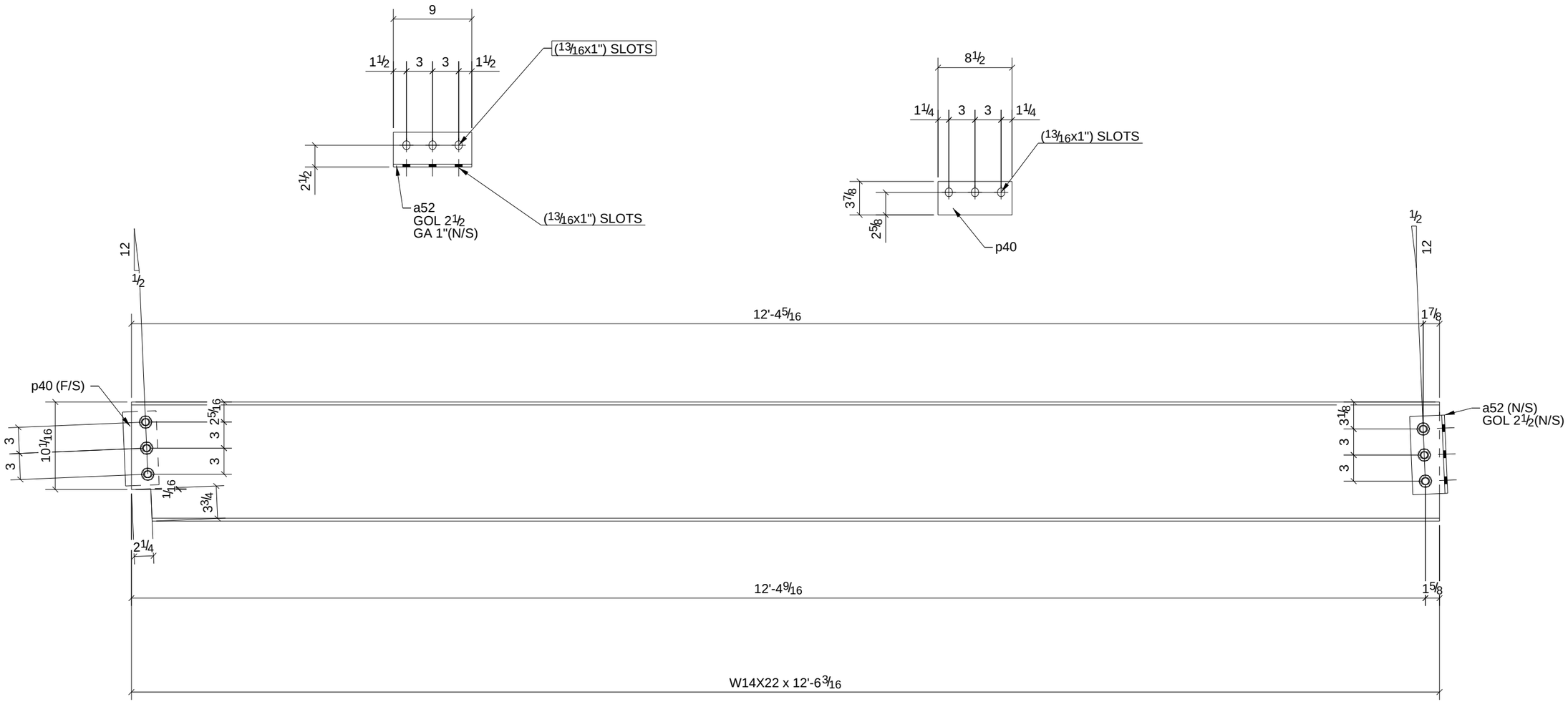

ONE - BEAM - 15B15

PHASE				
1	2	3	4	5
1	0	0	0	0

W	13 11/16"x1/4"
F	5"x5/16"

REV.	DESCRIPTION	DATE	DWN	CHK
A	For Approval & Field Survey	8/30/10	TMc	TAN
0	For Fabrication & F&F	9/15/10	TMc	TAN

GENERAL NOTES

MATERIAL: A992 / A36
ELECTRODES: E70XX LH
REF. DRG.
HOLES: 13/16 DIA. U/N
CONN'S.: -
SURFACE PREP. AND PAINT: SSPC-SP-2 GREY PRIMER DEVOE NA-195 (U.N,)

JOB USE
SHOP
APPROVAL

DESCRIPTION: BEAM
PROJECT NAME: Hamilton High School Phase III
LOCATION: Hamilton City School District - Hamilton
CONTRACTOR: GC Contracting

BILL OF MATERIAL

SHIP	MARK	NO PCS	DESCRIPTION	LENGTH	PIECE MARK	REMARKS
1	15B15	1	W14X22	12'-6 3/16"		SQ-2 A992
		1	L4X4X5/16	0'-9"	a52	A36
		1	PL3/8"X3 7/8"	0'-8 1/2"	p40	A36
		6	3/4"Ø A325N BOLT	0'-1 3/4"		

Avenue Fabricating Inc.
1281 Clough Pike
Batavia, OH 45103
(513) 752-1911

DRAWN BY	DATE	
TMc	08/30/2010	
CHKD. BY	DATE	
TAN		
JOB No.	DRG. No.	REV.
10-16	15B15	2

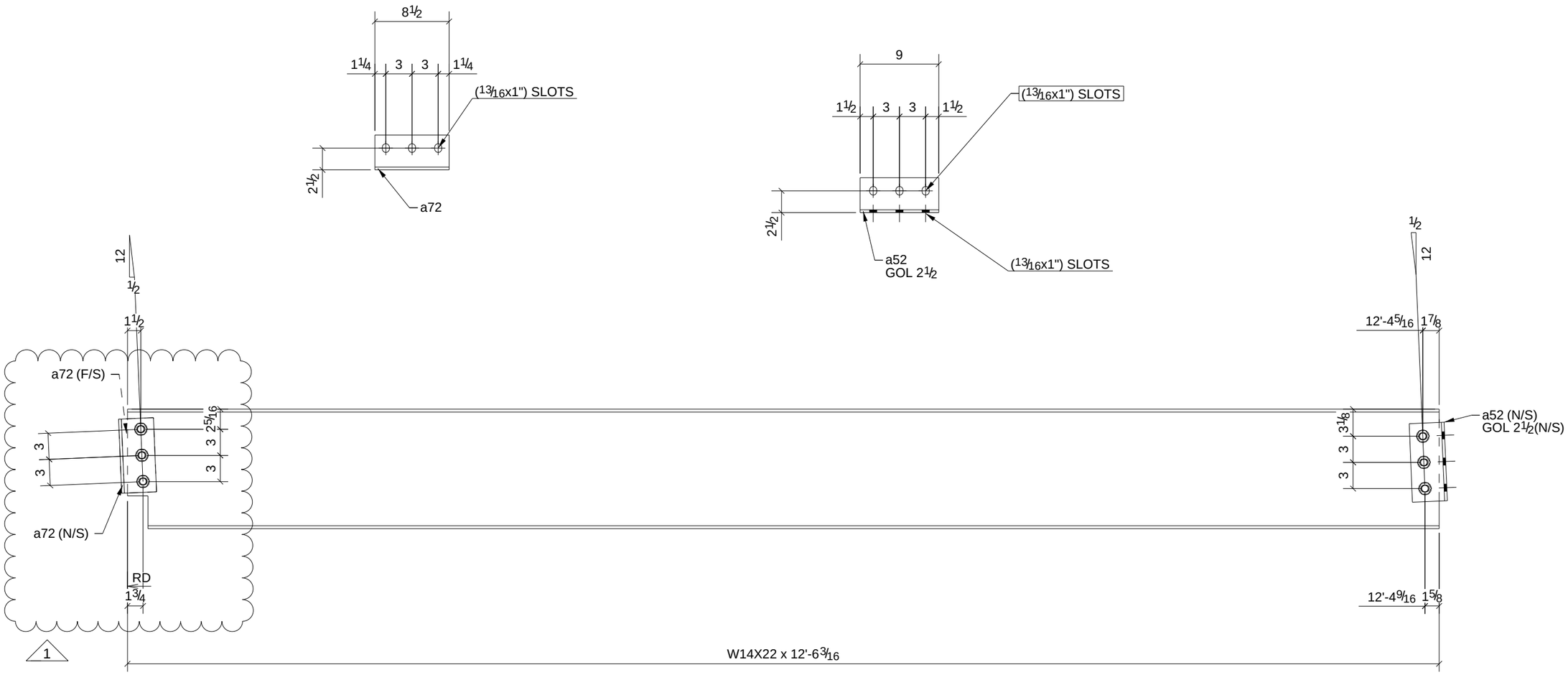

PHASE				
1	2	3	4	5
1	0	0	0	0

ONE - BEAM - 15B15

W	13 11/16"x1/4"
F	5"x5/16"

REV.	DESCRIPTION	DATE	DWN	CHK
A	For Approval & Field Survey	8/30/10	TMc	TAN
1	revised shear bar to angles	9-17-10		
0	For Fabrication & F&F	9/15/10	TMc	TAN

GENERAL NOTES

MATERIAL: A992 / A36
ELECTRODES: E70XX LH
REF. DRG.
HOLES: 13/16 DIA. U/N
CONN'S.: -
SURFACE PREP. AND PAINT: SSPC-SP-2
GREY PRIMER DEVOE NA-195 (U.N,)

JOB USE
SHOP
APPROVAL

BILL OF MATERIAL

SHIP	MARK	NO PCS	DESCRIPTION	LENGTH	PIECE MARK	REMARKS
1	15B15	1	W14X22	12'-6 3/16"		SQ-2 A992
		1	L4X4X5/16	0'-9"	a52	A36
		2	L4X4X5/16	0'-8 1/2"	a72	A36
		3	3/4"Ø A325N BOLT	0'-2"		
		3	3/4"Ø A325N BOLT	0'-1 3/4"		

DESCRIPTION: BEAM
PROJECT NAME: Hamilton High School Phase III
LOCATION: Hamilton City School District - Hamilton
CONTRACTOR: GC Contracting

Avenue Fabricating Inc.
1281 Clough Pike
Batavia, OH 45103
(513) 752-1911

DRAWN BY TMc	DATE 08/30/2010
CHKD. BY TAN	DATE
JOB No. 10-16	DRG. No. 15B15 / REV. 3

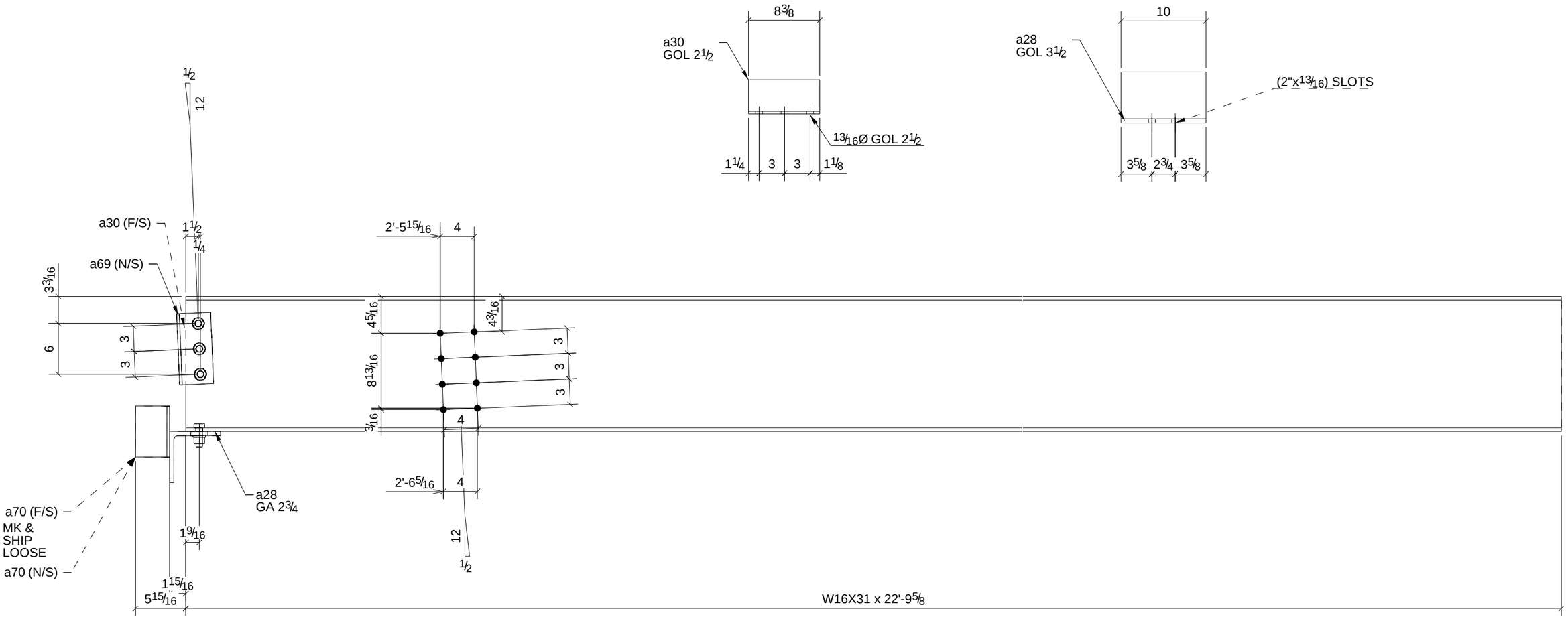

2 - BEAMS - 15B16

PHASE				
1	2	3	4	5
2	0	0	0	0

W	15 7/8" x 1/4"
F	5 1/2" x 7/16"

REV.	DESCRIPTION	DATE	DWN	CHK
0	For Fabrication & F&F	9/15/10	TMc	TAN

GENERAL NOTES

MATERIAL: A992 / A36
ELECTRODES: E70XX LH
REF. DRG.
HOLES: 13/16 DIA. U/N
CONN'S.: -
SURFACE PREP. AND PAINT: SSPC-SP-2 GREY PRIMER DEVOE NA-195 (U.N,)

JOB USE
SHOP
APPROVAL

DESCRIPTION: BEAM
PROJECT NAME: Hamilton High School Phase III
LOCATION: Hamilton City School District - Hamilton
CONTRACTOR: GC Contracting

BILL OF MATERIAL

SHIP	MARK	NO PCS	DESCRIPTION	LENGTH	PIECE MARK	REMARKS
2	15B16	2	W16X31	22'-9 5/8"		SQ-2 A992
		2	L6X6X1/2	0'-10"	a28	A36
		2	L4X4X5/16	0'-8 3/8"	a30	A36
		2	L4X4X5/16	0'-8 3/8"	a69	A36
		4	L4X4X5/16	0'-6"	a70	A36
		6	3/4"Ø A325N BOLT	0'-2"		
		4	3/4"Ø A325N BOLT	0'-2 1/4"		

Avenue Fabricating Inc.
1281 Clough Pike
Batavia, OH 45103
(513) 752-1911

DRAWN BY	DATE
TMc	08/30/2010
CHKD. BY	DATE
TAN	
JOB No.	DRG. No. / REV.
10-16	15B16 / 1

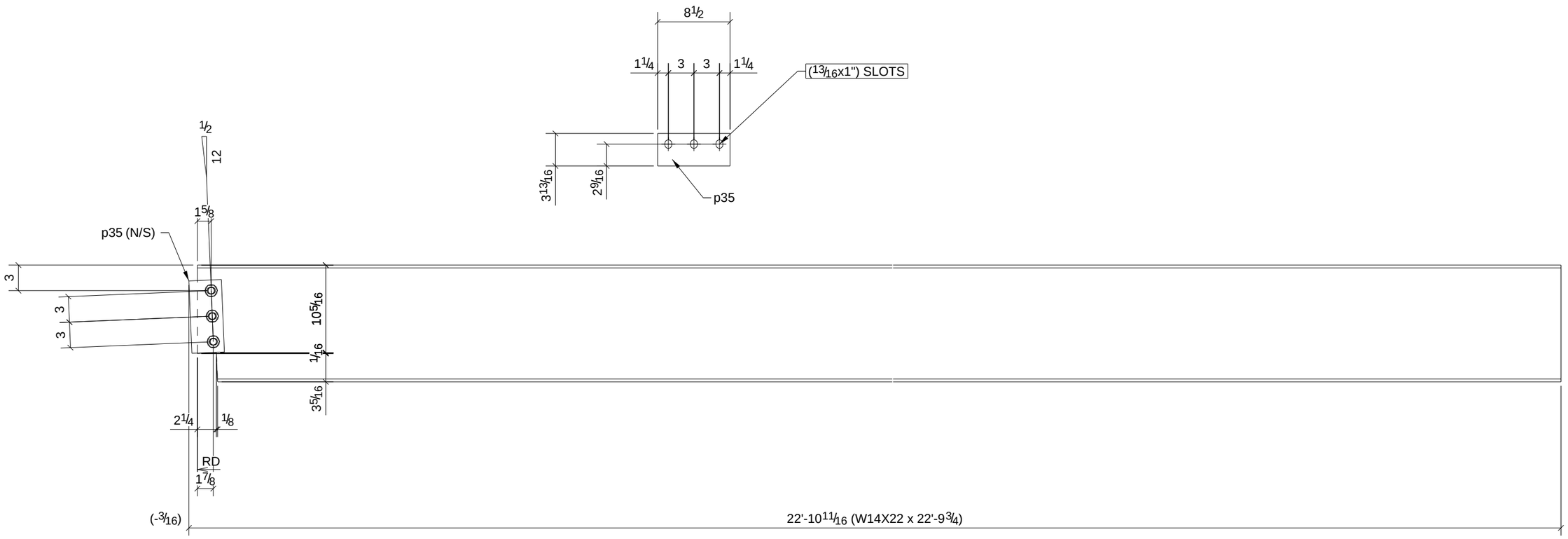

2 - BEAMS - 15B17

PHASE				
1	2	3	4	5
2	0	0	0	0

W	13 11/16"x1/4"
F	5"x5/16"

REV.	DESCRIPTION	DATE	DWN	CHK
A	For Approval & Field Survey	8/30/10	TMc	TAN
0	For Fabrication & F&F	9/15/10	TMc	TAN

GENERAL NOTES

MATERIAL: A992 / A36
ELECTRODES: E70XX LH
REF. DRG.
HOLES: 13/16 DIA. U/N
CONN'S.: -
SURFACE PREP. AND PAINT: SSPC-SP-2 GREY PRIMER DEVOE NA-195 (U.N,)

JOB USE
SHOP
APPROVAL

DESCRIPTION: BEAM
PROJECT NAME: Hamilton High School Phase III
LOCATION: Hamilton City School District - Hamilton
CONTRACTOR: GC Contracting

BILL OF MATERIAL

SHIP	MARK	NO PCS	DESCRIPTION	LENGTH	PIECE MARK	REMARKS
2	15B17	2	W14X22	22'-9 3/4"		SQ-2 A992
		2	PL3/8"X3 13/16"	0'-8 1/2"	p35	A36
		6	3/4"Ø A325N BOLT	0'-1 3/4"		

Avenue Fabricating Inc.
1281 Clough Pike
Batavia, OH 45103
(513) 752-1911

DRAWN BY	TMc
DATE	08/30/2010
CHKD. BY	TAN
DATE	
JOB No.	10-16
DRG. No.	15B17
REV.	2

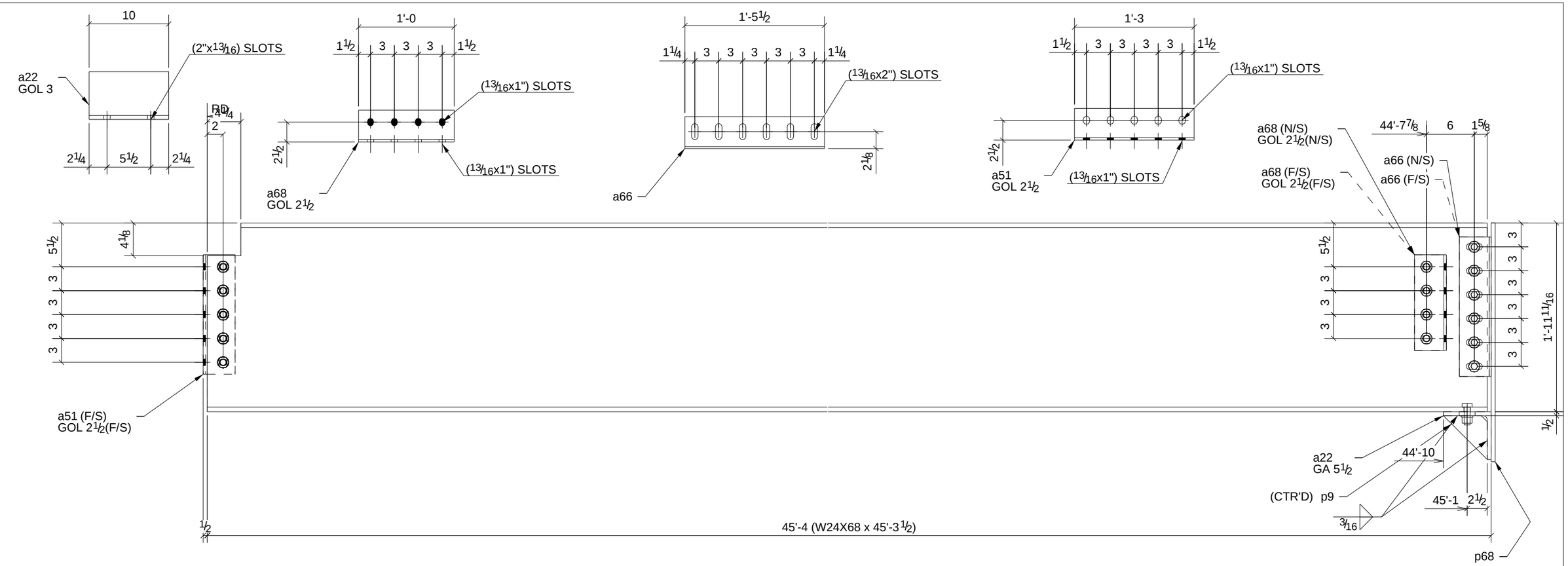

ONE - BEAM - 15B18

PHASE				
1	2	3	4	5
1	0	0	0	0

W	23 11/16"x7/16"
F	9"x9/16"

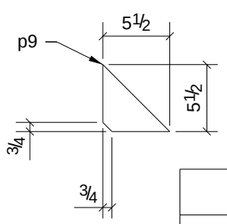

BILL OF MATERIAL

SHIP	MARK	NO PCS	DESCRIPTION	LENGTH	PIECE MARK	REMARKS
1	15B18	1	W24X68	45'-3 1/2"		SQ-2 A992
		1	L6X6X1/2	0'-10"	a22	A36
		1	L4X4X5/16	1'-3"	a51	A36
		2	L4X4X1/4	1'-5 1/2"	a66	A36
		2	L4X4X5/16	1'-0"	a68	A36
		1	BAR3/4"X5 1/2"	0'-5 1/2"	p9	A36
		1	BAR1/2"X7"	2'-6"	p68	A36
		5	3/4"Ø A325N BOLT	0'-2"		
		12	3/4"Ø A325N BOLT	0'-2 1/4"		

REV.	DESCRIPTION	DATE	DWN	CHK
0	For Fabrication & F&F	9/15/10	TMc	TAN

GENERAL NOTES

MATERIAL: A992 / A36
ELECTRODES: E70XX LH
REF. DRG.
HOLES: 13/16 DIA. U/N
CONN'S.: -
SURFACE PREP. AND PAINT: SSPC-SP-2 GREY PRIMER DEVOE NA-195 (U.N,)

JOB USE
SHOP
APPROVAL

DESCRIPTION: BEAM
PROJECT NAME: Hamilton High School Phase III
LOCATION: Hamilton City School District - Hamilton
CONTRACTOR: GC Contracting

Avenue Fabricating Inc.
1281 Clough Pike
Batavia, OH 45103
(513) 752-1911

DRAWN BY	DATE	
TMc	09/01/2010	
CHKD. BY	DATE	
TAN		
JOB No.	DRG. No.	REV.
10-16	15B18	4

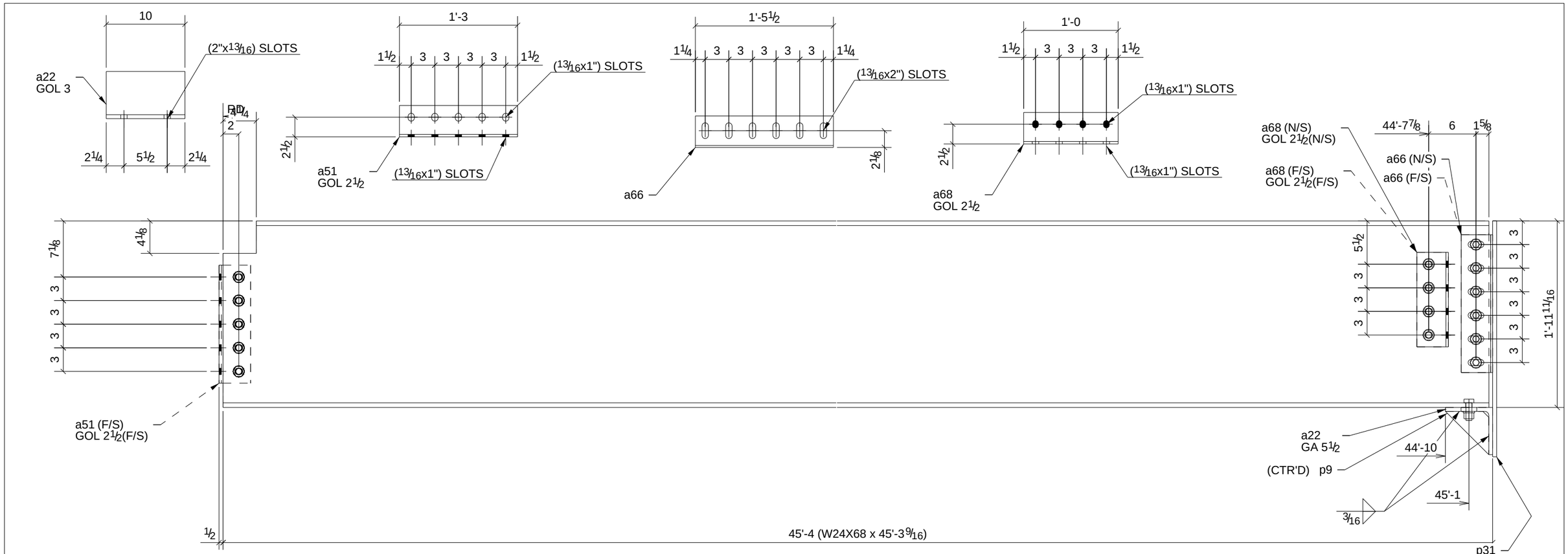

CTR'D
TACK WELD
TO SEAT ANGLE
OR MARK & SHIP
LOOSE WITH BEAM

ONE - BEAM - 15B19

PHASE				
1	2	3	4	5
1	0	0	0	0

W	23 11/16"x7/16"
F	9"x9/16"

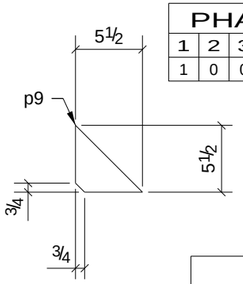

BILL OF MATERIAL

SHIP	MARK	NO PCS	DESCRIPTION	LENGTH	PIECE MARK	REMARKS
1	15B19	1	W24X68	45'-3 9/16"		SQ-2 A992
		1	L6X6X1/2	0'-10"	a22	A36
		1	L4X4X5/16	1'-3"	a51	A36
		2	L4X4X1/4	1'-5 1/2"	a66	A36
		2	L4X4X5/16	1'-0"	a68	A36
		1	BAR3/4"X5 1/2"	0'-5 1/2"	p9	A36
		1	BAR1/2"X7"	2'-6"	p31	A36
		5	3/4"Ø A325N BOLT	0'-2"		
		12	3/4"Ø A325N BOLT	0'-2 1/4"		

REV.	DESCRIPTION	DATE	DWN	CHK
0	For Fabrication & F&F	9/15/10	TMc	TAN

GENERAL NOTES

MATERIAL: A992 / A36
ELECTRODES: E70XX LH
REF. DRG.
HOLES: 13/16 DIA. U/N
CONN'S.: -
SURFACE PREP. AND PAINT: SSPC-SP-2 GREY PRIMER DEVOE NA-195 (U.N,)

JOB USE
SHOP
APPROVAL

DESCRIPTION: BEAM
PROJECT NAME: Hamilton High School Phase III
LOCATION: Hamilton City School District - Hamilton
CONTRACTOR: GC Contracting

Avenue Fabricating Inc.
1281 Clough Pike
Batavia, OH 45103
(513) 752-1911

DRAWN BY	DATE	
TMc	09/15/2010	
CHKD. BY: TAN	DATE	
JOB No.: 10-16	DRG. No.: 15B19	REV.: 1

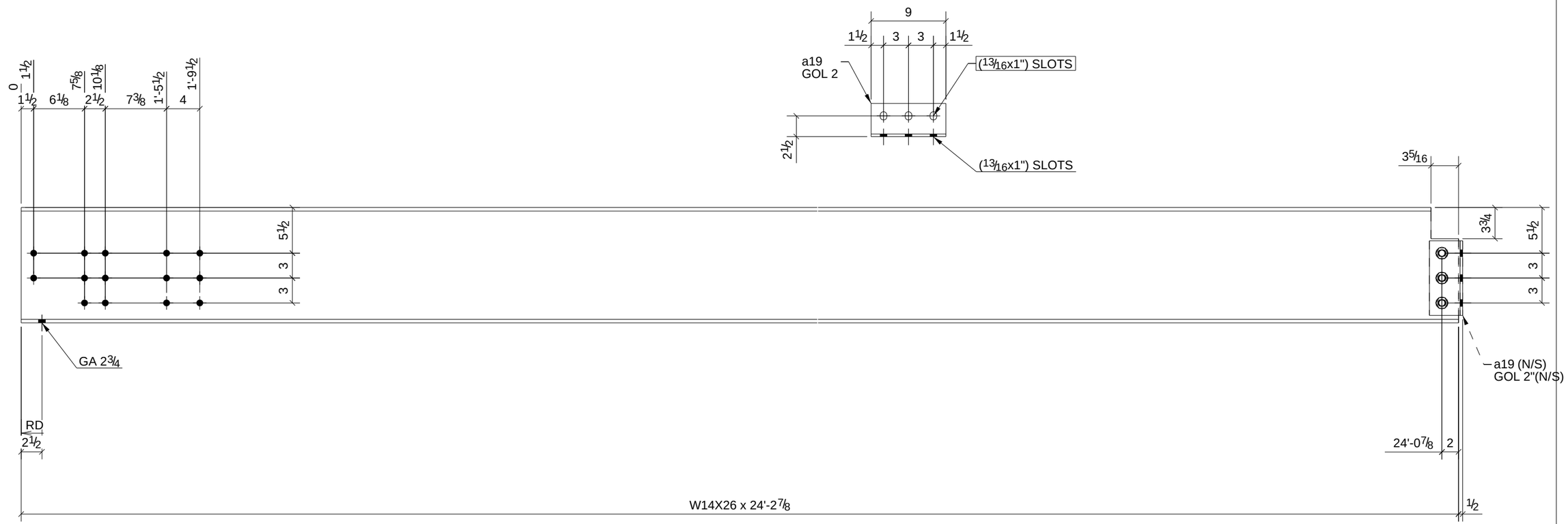

ONE - BEAM - 15B2

PHASE				
1	2	3	4	5
1	0	0	0	0

W	13 7/8"x1/4"
F	5"x7/16"

BILL OF MATERIAL

SHIP	MARK	NO PCS	DESCRIPTION	LENGTH	PIECE MARK	REMARKS
1	15B2	1	W14X26	24'-2 7/8"		SQ-2 A992
		1	L4X3-1/2X5/16	0'-9"	a19	A36
		3	3/4"Ø A325N BOLT	0'-1 3/4"		

REV.	DESCRIPTION	DATE	DWN	CHK
A	For Approval & Field Survey	8/30/10	TMc	TAN
0	For Fabrication & F&F	9/15/10	TMc	TAN

GENERAL NOTES

MATERIAL: A992 / A36
ELECTRODES: E70XX LH
REF. DRG.
HOLES: 13/16 DIA. U/N
CONN'S.: -
SURFACE PREP. AND PAINT: SSPC-SP-2 GREY PRIMER DEVOE NA-195 (U.N,)

JOB USE
SHOP
APPROVAL

DESCRIPTION: BEAM
PROJECT NAME: Hamilton High School Phase III
LOCATION: Hamilton City School District - Hamilton
CONTRACTOR: GC Contracting

Avenue Fabricating Inc.
1281 Clough Pike
Batavia, OH 45103
(513) 752-1911

DRAWN BY TMc	DATE 09/01/2010		
CHKD. BY TAN	DATE		
JOB No. 10-16	DRG. No. 15B2	REV. 2	

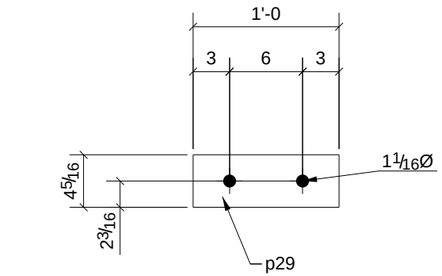

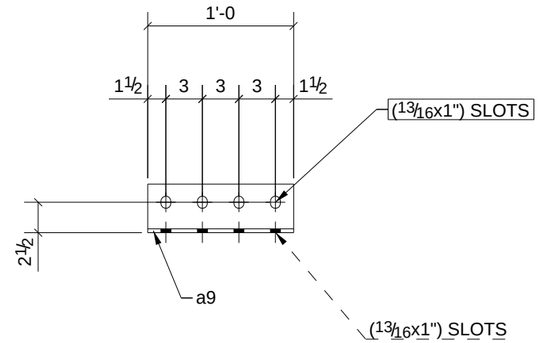

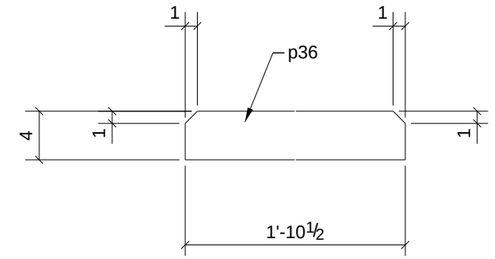

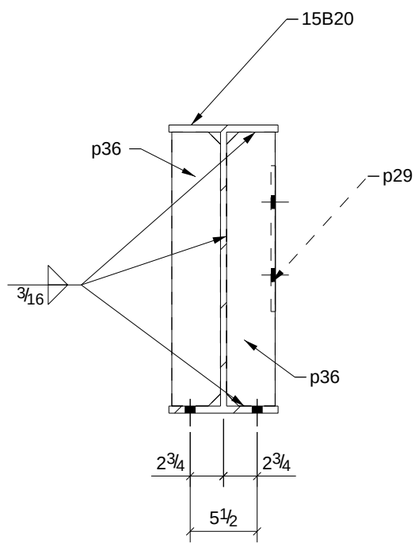

A - A

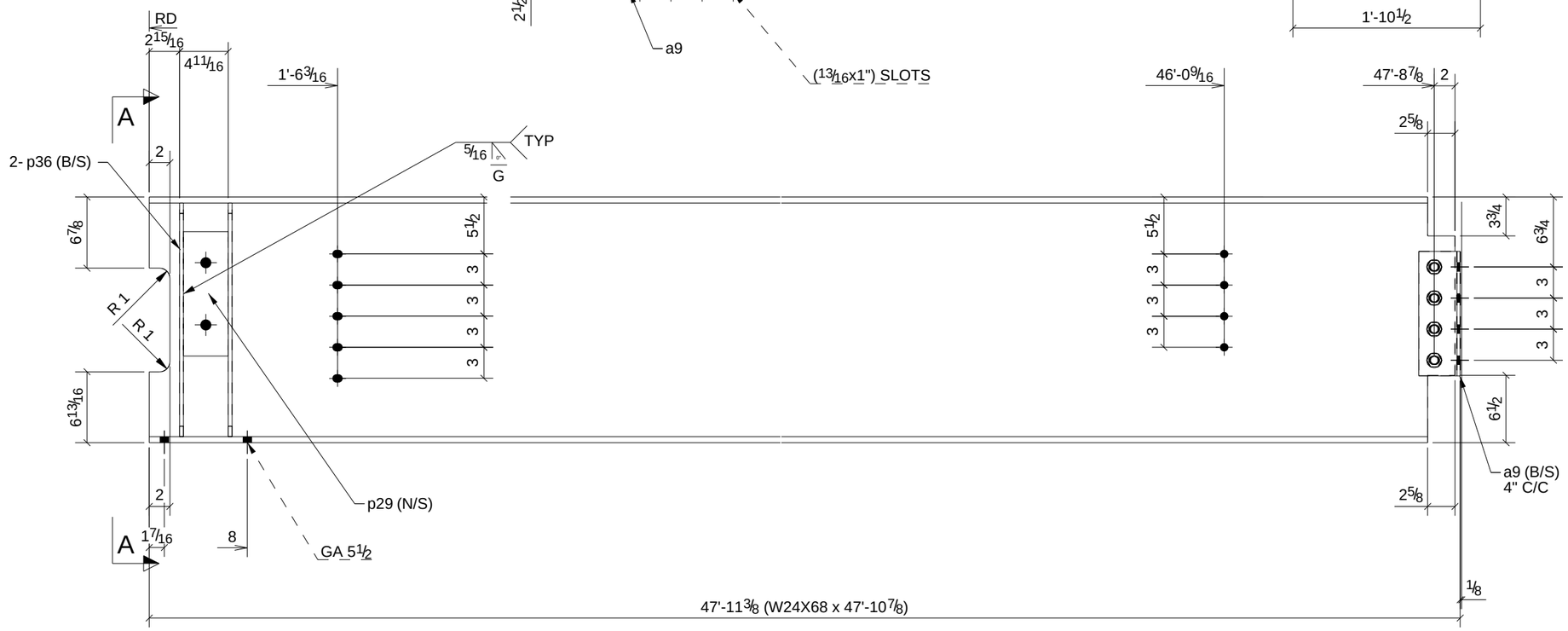

ONE - BEAM - 15B20

PHASE				
1	2	3	4	5
1	0	0	0	0

W	23 11/16"x 7/16"
F	9"x 9/16"

REV.	DESCRIPTION	DATE	DWN	CHK
A	For Approval & Field Survey	8/30/10	TMc	TAN
0	For Fabrication & F&F	9/15/10	TMc	TAN

GENERAL NOTES

MATERIAL: A992 / A36
ELECTRODES: E70XX LH
REF. DRG.
HOLES: 13/16 DIA. U/N
CONN'S.: -
SURFACE PREP. AND PAINT: SSPC-SP-2 GREY PRIMER DEVOE NA-195 (U.N,)

JOB USE
SHOP
APPROVAL

BILL OF MATERIAL

SHIP	MARK	NO PCS	DESCRIPTION	LENGTH	PIECE MARK	REMARKS
1	15B20	1	W24X68	47'-10 7/8"		SQ-2 A992
		2	L4X3-1/2X5/16	1'-0"	a9	A36
		1	PL3/8"X4 5/16"	1'-0"	p29	A36
		4	BAR3/8"X4"	1'-10 1/2"	p36	A36
		4	3/4"Ø A325N BOLT	0'-2 1/4"		

DESCRIPTION: BEAM
PROJECT NAME: Hamilton High School Phase III
LOCATION: Hamilton City School District - Hamilton
CONTRACTOR: GC Contracting

Avenue Fabricating Inc.
1281 Clough Pike
Batavia, OH 45103
(513) 752-1911

DRAWN BY	DATE	
TMc	08/30/2010	
CHKD. BY	DATE	
TAN		
JOB No.	DRG. No.	REV.
10-16	15B20	3

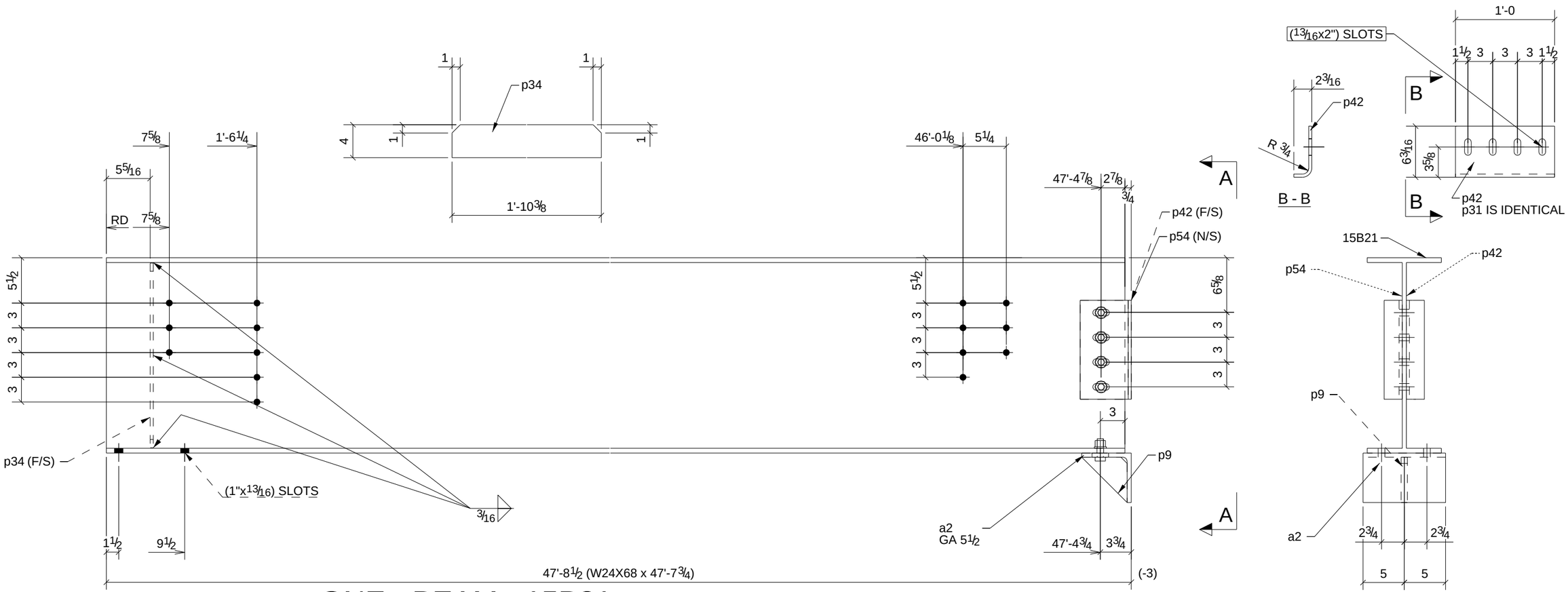

ONE - BEAM - 15B21

PHASE				
1	2	3	4	5
1	0	0	0	0

W	23 11/16"x7/16"
F	9"x9/16"

REV.	DESCRIPTION	DATE	DWN	CHK
A	For Approval & Field Survey	8/30/10	TMc	TAN
0	For Fabrication & F&F	9/15/10	TMc	TAN

GENERAL NOTES

MATERIAL: A992 / A36
ELECTRODES: E70XX LH
REF. DRG.
HOLES: 13/16 DIA. U/N
CONN'S.: -
SURFACE PREP. AND PAINT: SSPC-SP-2 GREY PRIMER DEVOE NA-195 (U.N,)

JOB USE
SHOP
APPROVAL

DESCRIPTION: BEAM
PROJECT NAME: Hamilton High School Phase III
LOCATION: Hamilton City School District - Hamilton
CONTRACTOR: GC Contracting

BILL OF MATERIAL

SHIP	MARK	NO PCS	DESCRIPTION	LENGTH	PIECE MARK	REMARKS
1	15B21	1	W24X68	47'-7 3/4"		SQ-2 A992
		1	L6X6X1/2	0'-10"	a2	A36
		1	BAR3/4"X5 1/2"	0'-5 1/2"	p9	A36
		1	BAR3/8"X4"	1'-10 3/8"	p34	A36
		1	PL3/8"X7 5/8"	1'-0"	p42	A36 BENT
		1	PL3/8"X7 5/8"	1'-0"	p54	A36 BENT
		2	3/4"Ø A325N BOLT	0'-2 1/4"		
		4	3/4"Ø A325N BOLT	0'-2 1/2"		

Avenue Fabricating Inc.
1281 Clough Pike
Batavia, OH 45103
(513) 752-1911

DRAWN BY	TMc
DATE	08/30/2010
CHKD. BY	TAN
DATE	
JOB No.	10-16
DRG. No.	15B21
REV.	3

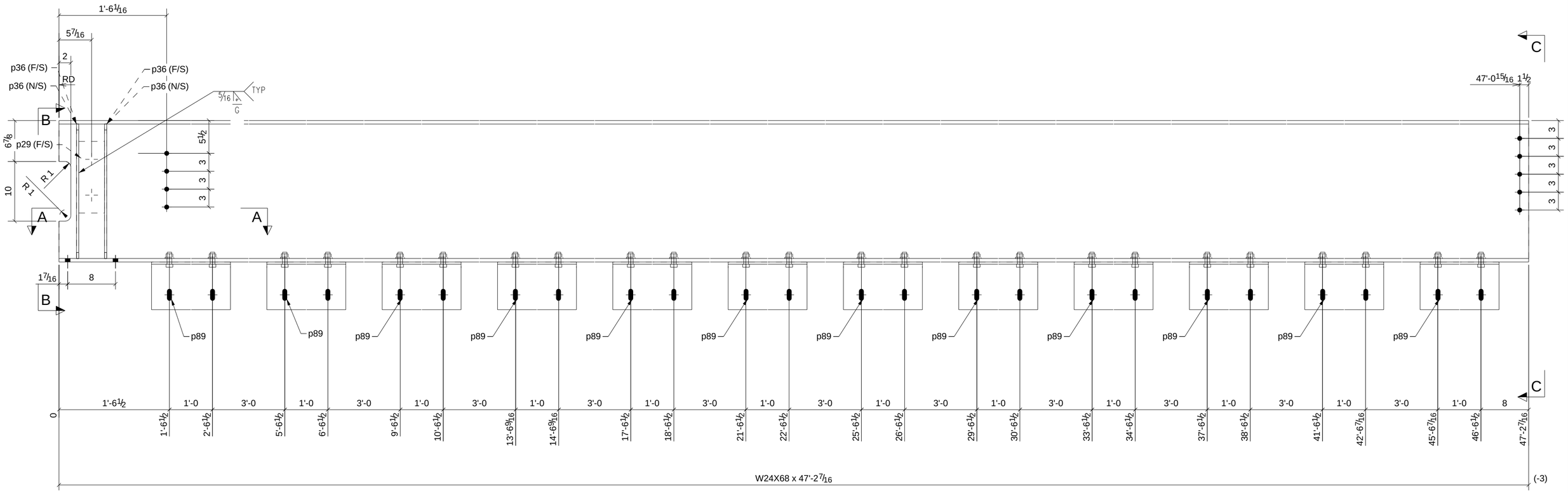

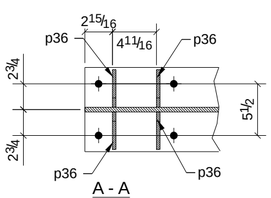

A - A

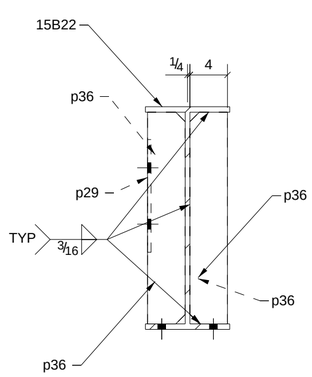

B - B

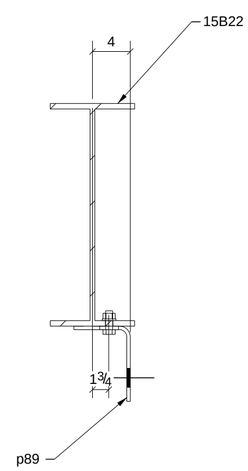

C - C

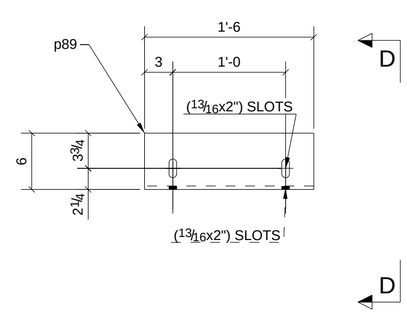

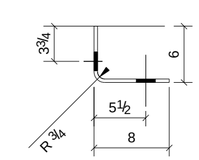

D - D

ONE - BEAM - 15B22

PHASE				
1	2	3	4	5
1	0	0	0	0

W	23 11/16"x 7/16"
F	9"x 9/16"

REV.	DESCRIPTION	DATE	DWN	CHK
0	For Fabrication & F&F	9/15/10	TMc	TAN

GENERAL NOTES

MATERIAL: A992 / A36 ELECTRODES: E70XX LH REF. DRG.

HOLES: 13/16 DIA. U/N CONN'S.: -

SURFACE PREP. AND PAINT: SSPC-SP-2 GREY PRIMER DEVOE NA-195 (U.N,)

JOB USE | SHOP | APPROVAL

DESCRIPTION: BEAM

PROJECT NAME: Hamilton High School Phase III

LOCATION: Hamilton City School District - Hamilton

CONTRACTOR: GC Contracting

BILL OF MATERIAL

SHIP	MARK	NO PCS	DESCRIPTION	LENGTH	PIECE MARK	REMARKS
1	15B22	1	W24X68	47'-2 7/16"		SQ-2 A992
		1	PL3/8"X4 5/16"	1'-0"	p29	A36
		4	BAR3/8"X4"	1'-10 1/2"	p36	A36
		12	PL3/8"X13 1/4"	1'-6"	p89	A36
		24	3/4"Ø A307 BOLT	0'-2"		

Avenue Fabricating Inc.
1281 Clough Pike
Batavia, OH 45103
(513) 752-1911

DRAWN BY	DATE	
TMc	09/16/2010	
CHKD. BY	DATE	
TAN		
JOB No.	DRG. No.	REV.
10-16	15B22	1

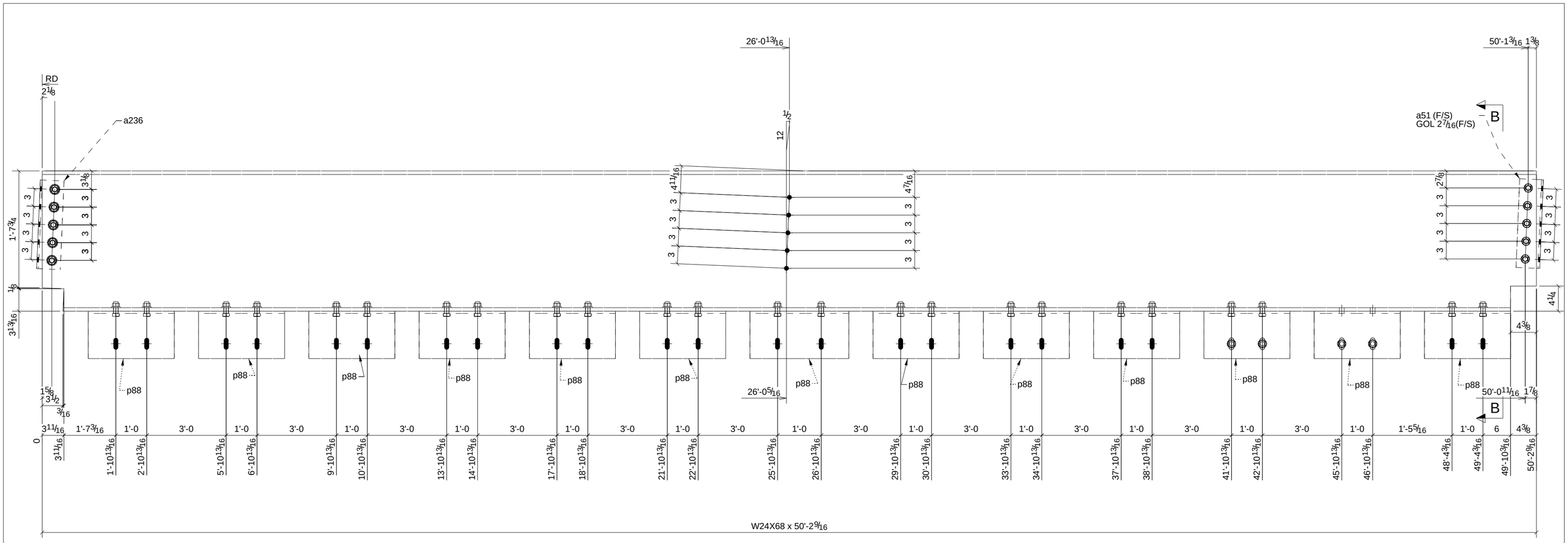

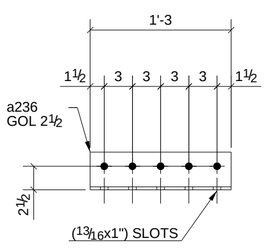

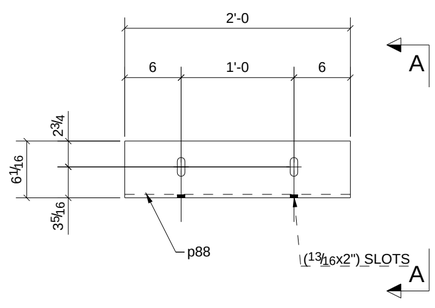

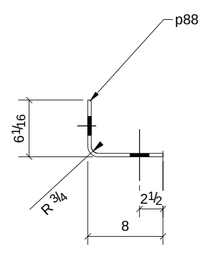

A - A

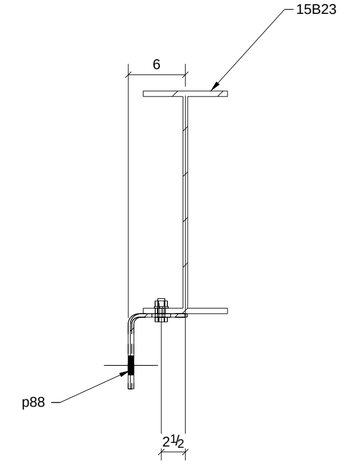

B - B

ONE - BEAM - 15B23

PHASE				
1	2	3	4	5
1	0	0	0	0

W	23 11/16"x 7/16"
F	9"x 9/16"

BILL OF MATERIAL

SHIP	MARK	NO PCS	DESCRIPTION	LENGTH	PIECE MARK	REMARKS
1	15B23	1	W24X68	50'-2 9/16"		SQ-2 A992
		1	L4X4X5/16	1'-3"	a51	A36
		1	L4X4X5/16	1'-3"	a236	A36
		13	PL3/8"X13 1/4"	2'-0"	p88	A36
		26	3/4"Ø A307 BOLT	0'-2"		
		5	3/4"Ø A325N BOLT	0'-2"		
		5	3/4"Ø A325N BOLT	0'-2 3/4"		

REV.	DESCRIPTION	DATE	DWN	CHK
0	For Fabrication & F&F	9/15/10	TMc	TAN

GENERAL NOTES

MATERIAL: A992 / A36 ELECTRODES: E70XX LH REF. DRG.

HOLES: 13/16 DIA. U/N CONN'S.: -

SURFACE PREP. AND PAINT: SSPC-SP-2 GREY PRIMER DEVOE NA-195 (U.N,)

JOB USE | SHOP | APPROVAL

DESCRIPTION: BEAM

PROJECT NAME: Hamilton High School Phase III

LOCATION: Hamilton City School District - Hamilton

CONTRACTOR: GC Contracting

Avenue Fabricating Inc.
1281 Clough Pike
Batavia, OH 45103
(513) 752-1911

DRAWN BY	DATE	
TMc	09/16/2010	
CHKD. BY	DATE	
TAN		
JOB No.	DRG. No.	REV.
10-16	15B23	1

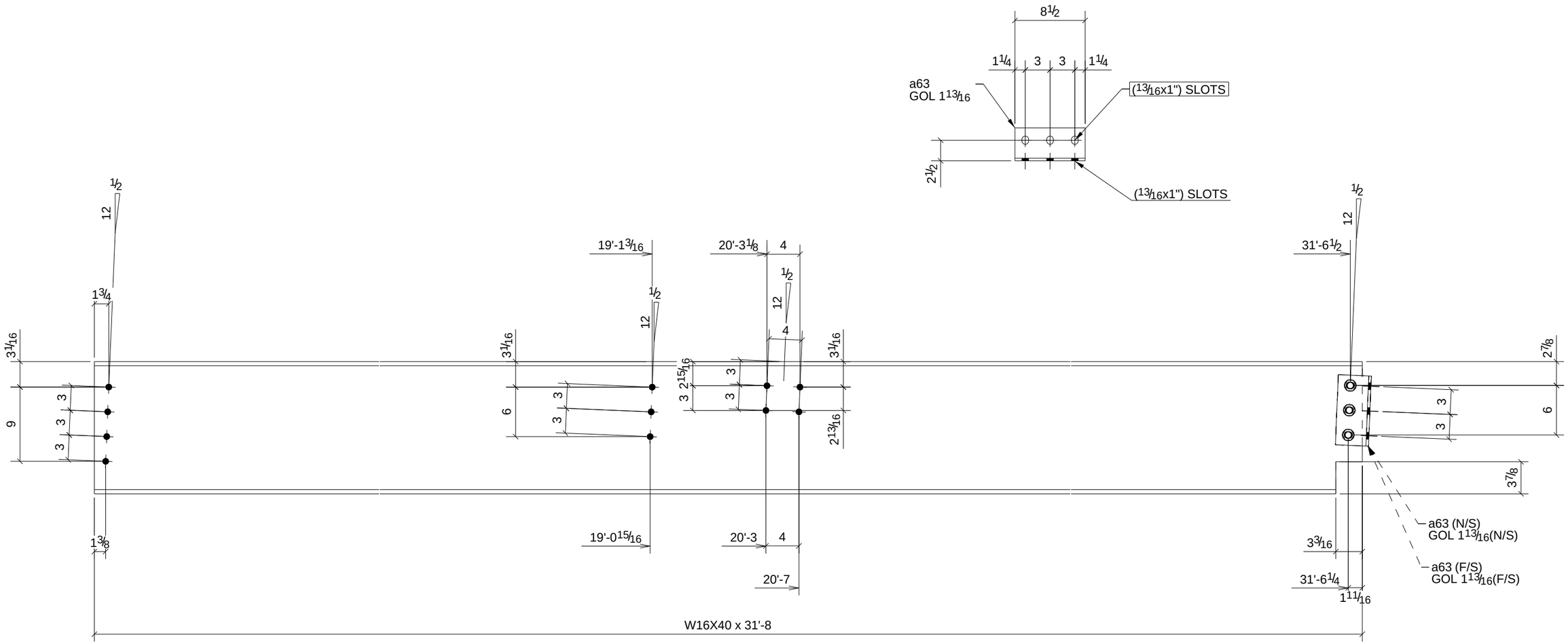

REV.	DESCRIPTION	DATE	DWN	CHK
A	For Approval & Field Survey	8/30/10	TMc	TAN
0	For Fabrication & F&F	9/15/10	TMc	TAN

ONE - BEAM - 15B25

PHASE				
1	2	3	4	5
1	0	0	0	0

W	16"x1/4"
F	7"x1/2"

GENERAL NOTES

MATERIAL: A992 / A36
ELECTRODES: E70XX LH
REF. DRG.
HOLES: 13/16 DIA. U/N
CONN'S.: -
SURFACE PREP. AND PAINT: SSPC-SP-2
GREY PRIMER DEVOE NA-195 (U.N,)

JOB USE
SHOP
APPROVAL

DESCRIPTION: BEAM
PROJECT NAME: Hamilton High School Phase III
LOCATION: Hamilton City School District - Hamilton
CONTRACTOR: GC Contracting

BILL OF MATERIAL

SHIP	MARK	NO PCS	DESCRIPTION	LENGTH	PIECE MARK	REMARKS
1	15B25	1	W16X40	31'-8"		SQ-2 A992
		2	L4X3-1/2X5/16	0'-8 1/2"	a63	A36
		3	3/4"Ø A325N BOLT	0'-2 1/4"		

Avenue Fabricating Inc.
1281 Clough Pike
Batavia, OH 45103
(513) 752-1911

DRAWN BY TMc	DATE 08/30/2010
CHKD. BY TAN	DATE
JOB No. 10-16	DRG. No. 15B25 / REV. 3

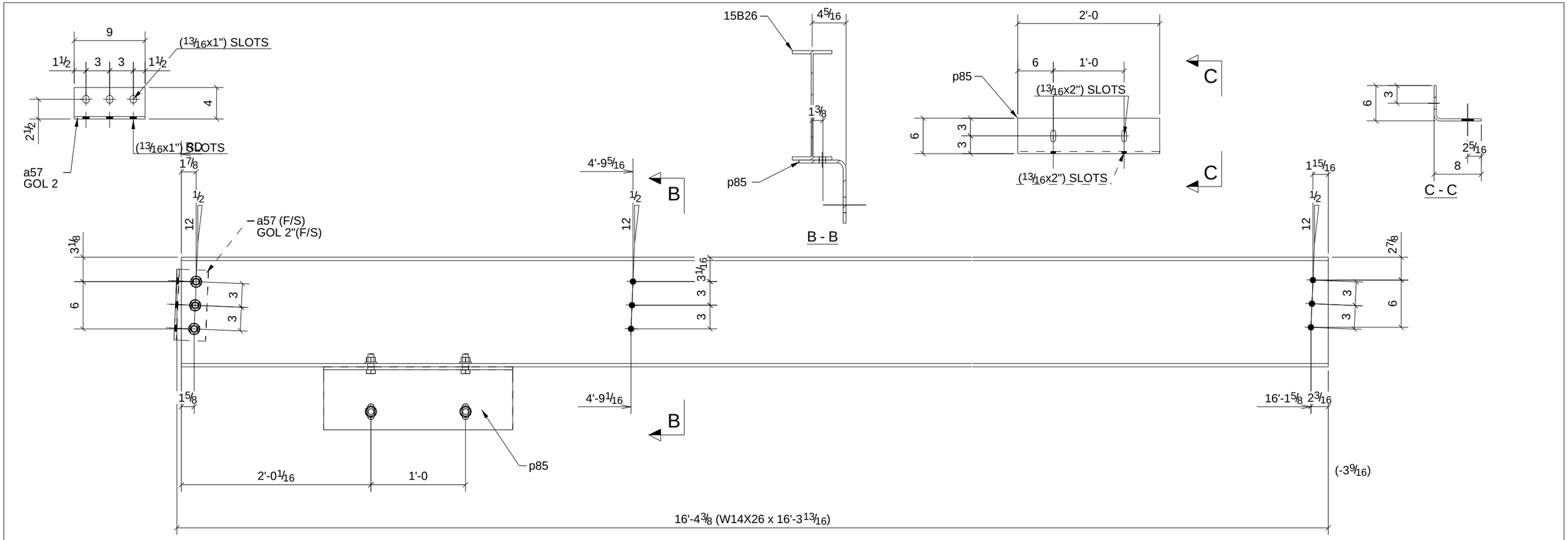

ONE - BEAM - 15B26

PHASE				
1	2	3	4	5
1	0	0	0	0

W	13 7/8"x1/4"
F	5"x7/16"

REV.	DESCRIPTION	DATE	DWN	CHK
0	For Fabrication & F&F	9/15/10	TMc	TAN

GENERAL NOTES

MATERIAL: A992 / A36
ELECTRODES: E70XX LH
REF. DRG.
HOLES: 13/16 DIA. U/N
CONN'S.: -
SURFACE PREP. AND PAINT: SSPC-SP-2 GREY PRIMER DEVOE NA-195 (U.N,)

JOB USE
SHOP
APPROVAL

BILL OF MATERIAL

SHIP	MARK	NO PCS	DESCRIPTION	LENGTH	PIECE MARK	REMARKS
1	15B26	1	W14X26	16'-3 13/16"		SQ-2 A992
		1	L4X3-1/2X5/16	0'-9"	a57	A36
		1	PL3/8"X13 1/4"	2'-0"	p85	A36
		2	3/4"Ø A307 BOLT	0'-2"		
		3	3/4"Ø A325N BOLT	0'-1 3/4"		

DESCRIPTION: BEAM
PROJECT NAME: Hamilton High School Phase III
LOCATION: Hamilton City School District - Hamilton
CONTRACTOR: GC Contracting

Avenue Fabricating Inc.
1281 Clough Pike
Batavia, OH 45103
(513) 752-1911

DRAWN BY	DATE	
TMc	09/16/2010	
CHKD. BY	DATE	
TAN		
JOB No.	DRG. No.	REV.
10-16	15B26	1

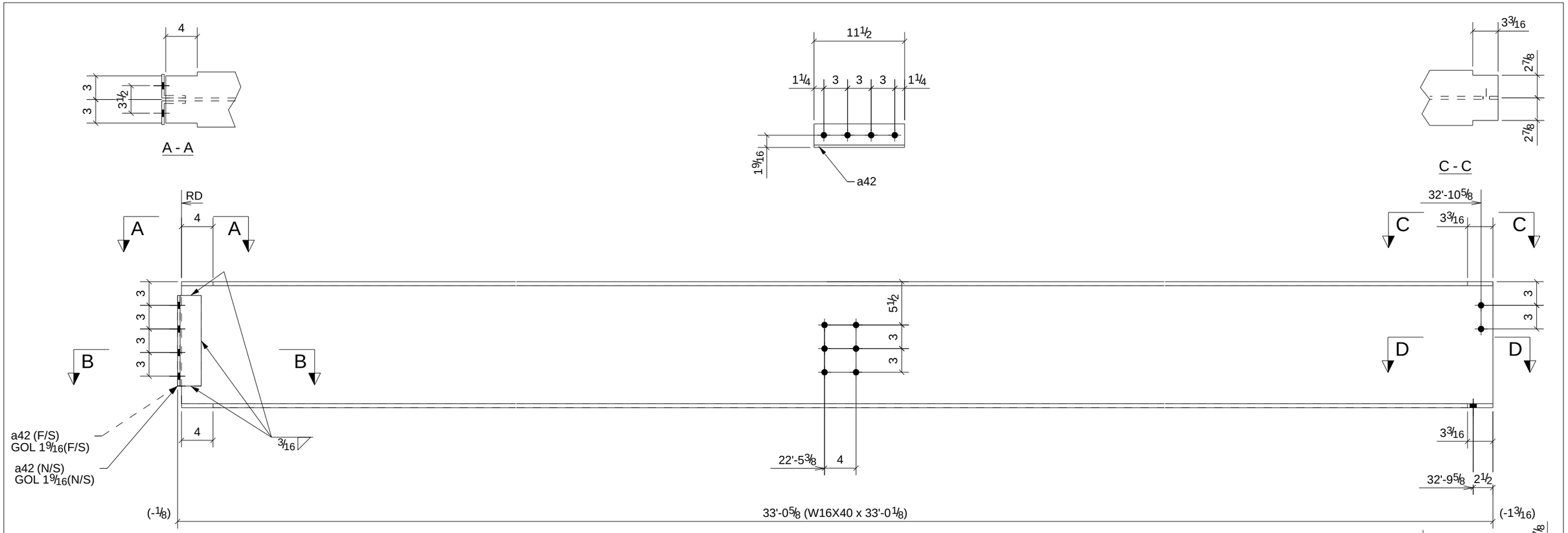

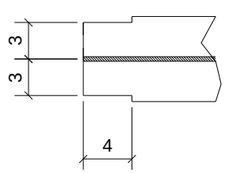

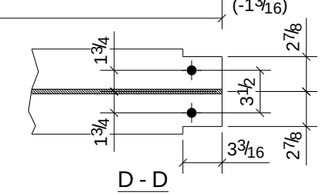

PHASE				
1	2	3	4	5
1	0	0	0	0

ONE - BEAM - 15B27

W	16"x1/4"
F	7"x1/2"

REV.	DESCRIPTION	DATE	DWN	CHK
A	For Approval & Field Survey	8/30/10	TMc	TAN
0	For Fabrication & F&F	9/15/10	TMc	TAN

GENERAL NOTES

MATERIAL: A992 / A36
ELECTRODES: E70XX LH
REF. DRG.
HOLES: 13/16 DIA. U/N
CONN'S.: -
SURFACE PREP. AND PAINT: SSPC-SP-2 GREY PRIMER DEVOE NA-195 (U.N,)

JOB USE
SHOP
APPROVAL

DESCRIPTION: BEAM
PROJECT NAME: Hamilton High School Phase III
LOCATION: Hamilton City School District - Hamilton
CONTRACTOR: GC Contracting

BILL OF MATERIAL

SHIP	MARK	NO PCS	DESCRIPTION	LENGTH	PIECE MARK	REMARKS
1	15B27	1	W16X40	33'-0 1/8"		SQ-2 A992
		2	L3X3X5/16	0'-11 1/2"	a42	A36

Avenue Fabricating Inc.
1281 Clough Pike
Batavia, OH 45103
(513) 752-1911

DRAWN BY TMc	DATE 08/30/2010
CHKD. BY TAN	DATE
JOB No. 10-16	DRG. No. 15B27 REV. 3

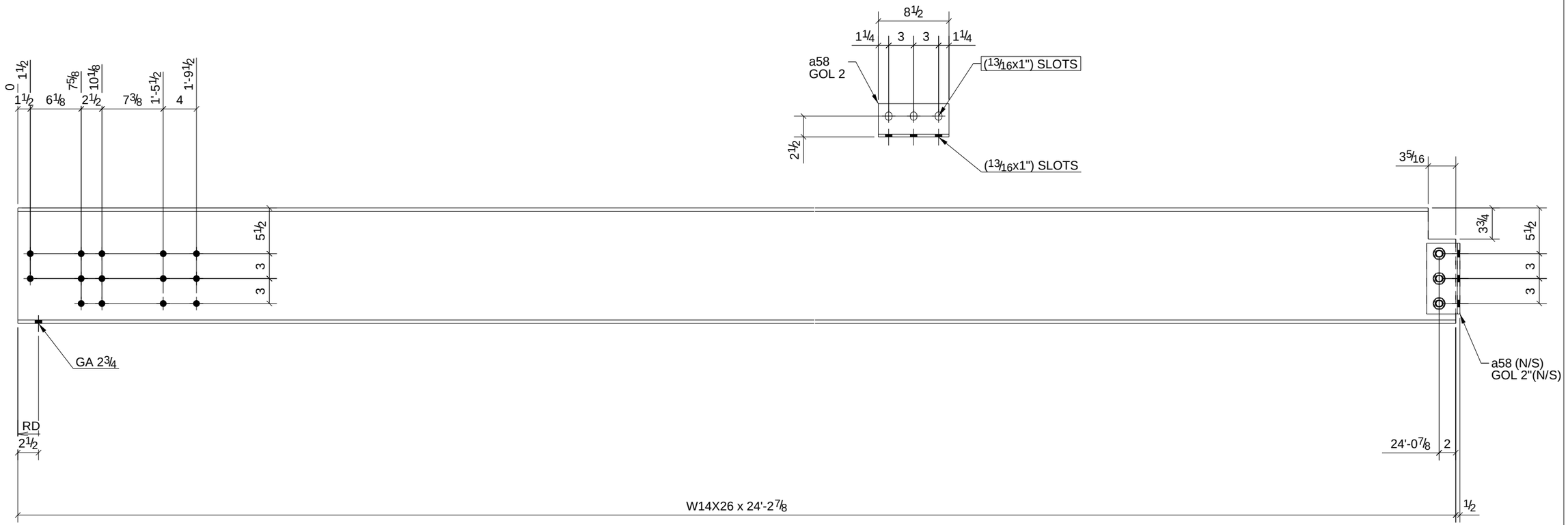

ONE - BEAM - 15B28

PHASE				
1	2	3	4	5
1	0	0	0	0

W	13 7/8"x1/4"
F	5"x7/16"

BILL OF MATERIAL

SHIP	MARK	NO PCS	DESCRIPTION	LENGTH	PIECE MARK	REMARKS
1	15B28	1	W14X26	24'-2 7/8"		SQ-2 A992
		1	L4X3-1/2X5/16	0'-8 1/2"	a58	A36
		3	3/4"Ø A325N BOLT	0'-1 3/4"		

REV.	DESCRIPTION	DATE	DWN	CHK
A	For Approval & Field Survey	8/30/10	TMc	TAN
0	For Fabrication & F&F	9/15/10	TMc	TAN

GENERAL NOTES

MATERIAL: A992 / A36
ELECTRODES: E70XX LH
REF. DRG.
HOLES: 13/16 DIA. U/N
CONN'S.: -
SURFACE PREP. AND PAINT: SSPC-SP-2 GREY PRIMER DEVOE NA-195 (U.N,)

JOB USE
SHOP
APPROVAL

DESCRIPTION: BEAM
PROJECT NAME: Hamilton High School Phase III
LOCATION: Hamilton City School District - Hamilton
CONTRACTOR: GC Contracting

Avenue Fabricating Inc.
1281 Clough Pike
Batavia, OH 45103
(513) 752-1911

DRAWN BY TMc	DATE 08/30/2010
CHKD. BY TAN	DATE
JOB No. 10-16	DRG. No. 15B28 / REV. 3

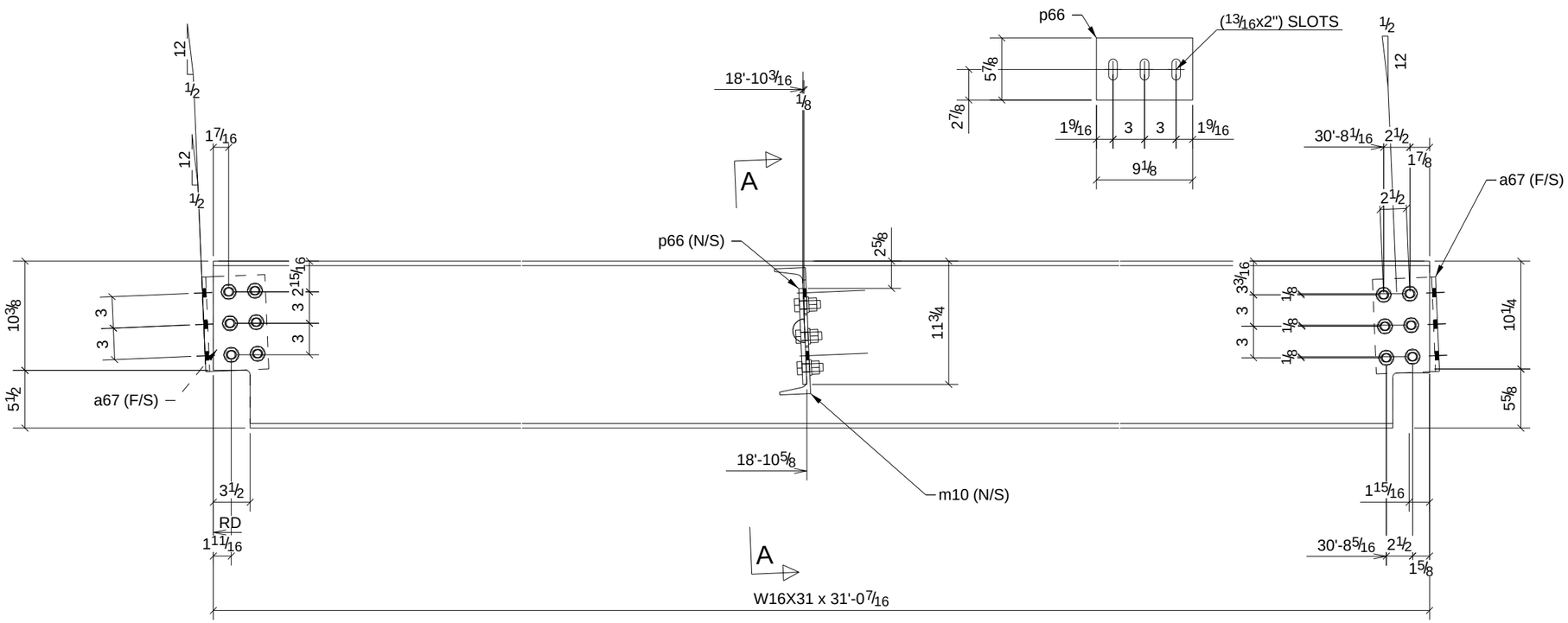

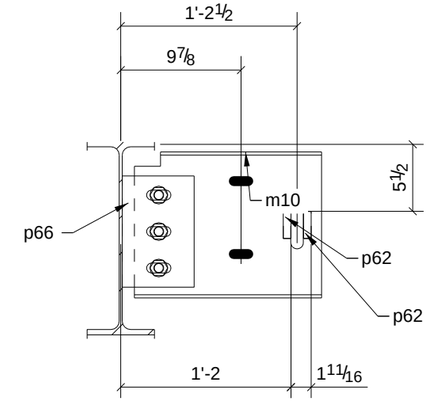

A - A

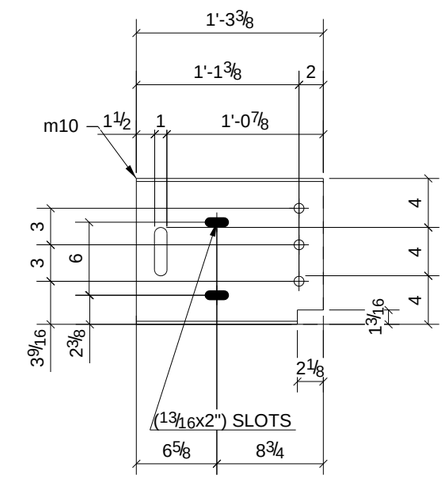

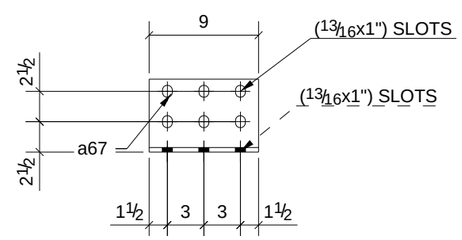

ONE - BEAM - 15B29

PHASE				
1	2	3	4	5
1	0	0	0	0

W	15 7/8"x1/4"
F	5 1/2"x7/16"

REV.	DESCRIPTION	DATE	DWN	CHK
A	For Approval & Field Survey	8/30/10	TMc	TAN
0	For Fabrication & F&F	9/15/10	TMc	TAN

GENERAL NOTES

MATERIAL: A992 / A36
ELECTRODES: E70XX LH
REF. DRG.
HOLES: 13/16 DIA. U/N
CONN'S.: -
SURFACE PREP. AND PAINT: SSPC-SP-2 GREY PRIMER DEVOE NA-195 (U.N,)

JOB USE
SHOP
APPROVAL

DESCRIPTION: BEAM
PROJECT NAME: Hamilton High School Phase III
LOCATION: Hamilton City School District - Hamilton
CONTRACTOR: GC Contracting

BILL OF MATERIAL

SHIP	MARK	NO PCS	DESCRIPTION	LENGTH	PIECE MARK	REMARKS
1	15B29	1	W16X31	31'-0 7/16"		SQ-2 A992
		2	L6X6X3/8	0'-9"	a67	A36
		1	C12X20.7	1'-3 3/8"	m10	A36
		2	PL5/8"X1 15/16"	0'-1 15/16"	p62	A36
		1	PL3/8"X5 7/8"	0'-9 1/8"	p66	A36
		3	3/4"Ø A325N BOLT	0'-2"		
		6	3/4"Ø A325N BOLT	0'-1 3/4"		

Avenue Fabricating Inc.
1281 Clough Pike
Batavia, OH 45103
(513) 752-1911

DRAWN BY TMc	DATE 09/01/2010		
CHKD. BY TAN	DATE		
JOB No. 10-16	DRG. No. 15B29	REV. 4	

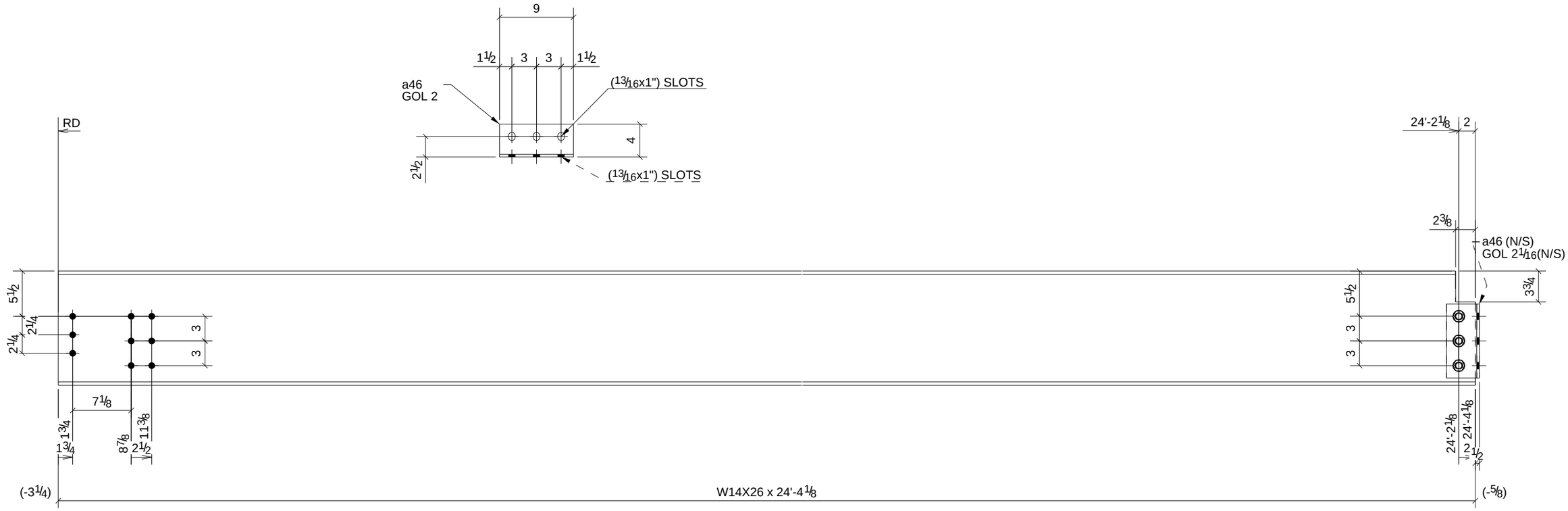

PHASE				
1	2	3	4	5
1	0	0	0	0

ONE - BEAM - 15B30

W	13 7/8"x1/4"
F	5"x7/16"

BILL OF MATERIAL

SHIP	MARK	NO PCS	DESCRIPTION	LENGTH	PIECE MARK	REMARKS
1	15B30	1	W14X26	24'-4 1/8"		SQ-2 A992
		1	L4X3-1/2X5/16	0'-9"	a46	A36
		3	3/4"Ø A325N BOLT	0'-1 3/4"		

REV.	DESCRIPTION	DATE	DWN	CHK
A	For Approval & Field Survey	8/30/10	TMc	TAN
0	For Fabrication & F&F	9/15/10	TMc	TAN

GENERAL NOTES

MATERIAL: A992 / A36
ELECTRODES: E70XX LH
REF. DRG.
HOLES: 13/16 DIA. U/N
CONN'S.: -
SURFACE PREP. AND PAINT: SSPC-SP-2 GREY PRIMER DEVOE NA-195 (U.N,)

JOB USE
SHOP
APPROVAL

DESCRIPTION: BEAM
PROJECT NAME: Hamilton High School Phase III
LOCATION: Hamilton City School District - Hamilton
CONTRACTOR: GC Contracting

Avenue Fabricating Inc.
1281 Clough Pike
Batavia, OH 45103
(513) 752-1911

DRAWN BY TMc	DATE 09/01/2010	
CHKD. BY TAN	DATE	
JOB No. 10-16	DRG. No. 15B30	REV. 4

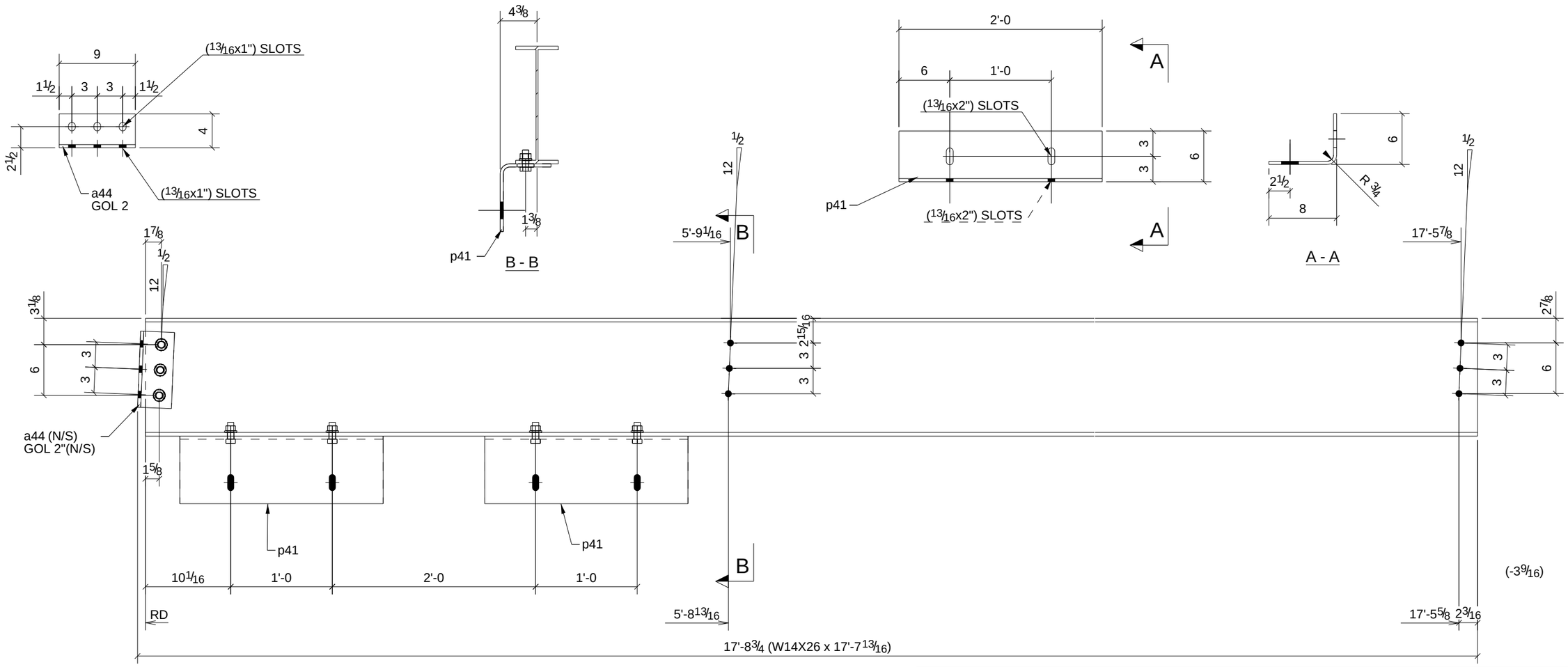

ONE - BEAM - 15B31

PHASE				
1	2	3	4	5
1	0	0	0	0

W	13 7/8"x1/4"
F	5"x7/16"

REV.	DESCRIPTION	DATE	DWN	CHK
A	For Approval & Field Survey	8/30/10	TMc	TAN
0	For Fabrication & F&F	9/15/10	TMc	TAN

GENERAL NOTES

MATERIAL: A992 / A36
ELECTRODES: E70XX LH
REF. DRG.
HOLES: 13/16 DIA. U/N
CONN'S.: -
SURFACE PREP. AND PAINT: SSPC-SP-2 GREY PRIMER DEVOE NA-195 (U.N,)

JOB USE
SHOP
APPROVAL

BILL OF MATERIAL

SHIP	MARK	NO PCS	DESCRIPTION	LENGTH	PIECE MARK	REMARKS
1	15B31	1	W14X26	17'-7 13/16"		SQ-2 A992
		1	L4X3-1/2X3/8	0'-9"	a44	A36
		2	PL3/8"X13 1/4"	2'-0"	p41	A36
		4	3/4"Ø A307 BOLT	0'-2"		
		3	3/4"Ø A325N BOLT	0'-2"		

DESCRIPTION: BEAM
PROJECT NAME: Hamilton High School Phase III
LOCATION: Hamilton City School District - Hamilton
CONTRACTOR: GC Contracting

Avenue Fabricating Inc.
1281 Clough Pike
Batavia, OH 45103
(513) 752-1911

DRAWN BY	DATE	
TMc	09/01/2010	
CHKD. BY	DATE	
TAN		
JOB No.	DRG. No.	REV.
10-16	15B31	4

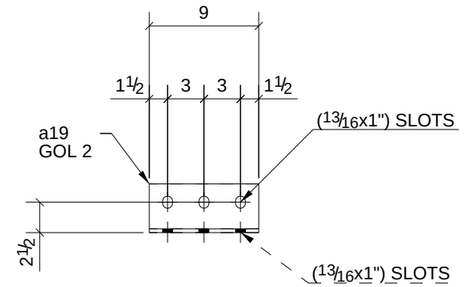

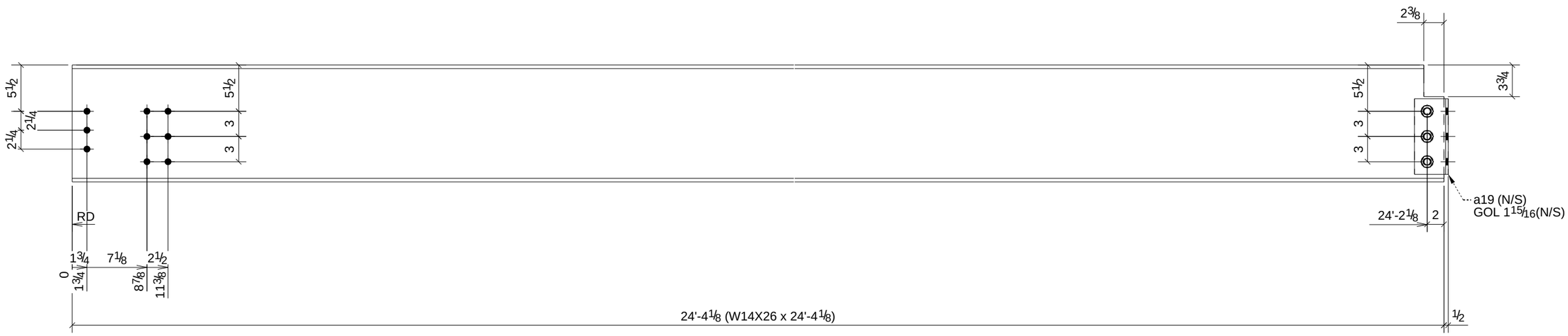

PHASE				
1	2	3	4	5
1	0	0	0	0

ONE - BEAM - 15B32

W	13 7/8"x1/4"
F	5"x7/16"

REV.	DESCRIPTION	DATE	DWN	CHK
A	For Approval & Field Survey	8/30/10	TMc	TAN
0	For Fabrication & F&F	9/15/10	TMc	TAN

GENERAL NOTES

MATERIAL: A992 / A36
ELECTRODES: E70XX LH
REF. DRG.
HOLES: 13/16 DIA. U/N
CONN'S.: -
SURFACE PREP. AND PAINT: SSPC-SP-2 GREY PRIMER DEVOE NA-195 (U.N,)

JOB USE
SHOP
APPROVAL

DESCRIPTION: BEAM
PROJECT NAME: Hamilton High School Phase III
LOCATION: Hamilton City School District - Hamilton
CONTRACTOR: GC Contracting

BILL OF MATERIAL

SHIP	MARK	NO PCS	DESCRIPTION	LENGTH	PIECE MARK	REMARKS
1	15B32	1	W14X26	24'-4 1/8"		SQ-2 A992
		1	L4X3-1/2X5/16	0'-9"	a19	A36
		3	3/4"Ø A325N BOLT	0'-1 3/4"		

Avenue Fabricating Inc.
1281 Clough Pike
Batavia, OH 45103
(513) 752-1911

DRAWN BY	DATE	
TMc	09/01/2010	
CHKD. BY	DATE	
TAN		
JOB No.	DRG. No.	REV.
10-16	15B32	4

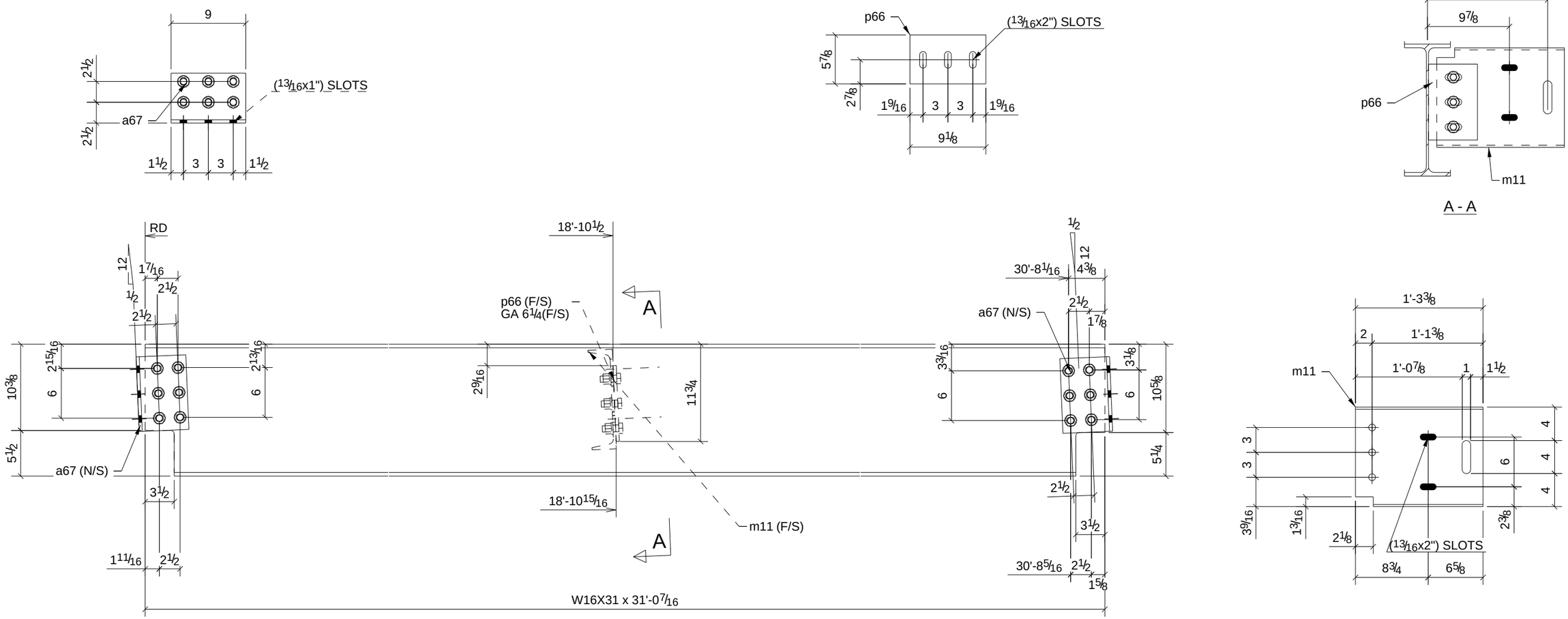

ONE - BEAM - 15B33

PHASE				
1	2	3	4	5
1	0	0	0	0

W	15 7/8"x1/4"
F	5 1/2"x7/16"

REV.	DESCRIPTION	DATE	DWN	CHK
A	For Approval & Field Survey	8/30/10	TMc	TAN
0	For Fabrication & F&F	9/15/10	TMc	TAN

GENERAL NOTES

MATERIAL: A992 / A36
ELECTRODES: E70XX LH
REF. DRG.
HOLES: 13/16 DIA. U/N
CONN'S.: -
SURFACE PREP. AND PAINT: SSPC-SP-2 GREY PRIMER DEVOE NA-195 (U.N,)

JOB USE
SHOP
APPROVAL

DESCRIPTION: BEAM
PROJECT NAME: Hamilton High School Phase III
LOCATION: Hamilton City School District - Hamilton
CONTRACTOR: GC Contracting

BILL OF MATERIAL

SHIP	MARK	NO PCS	DESCRIPTION	LENGTH	PIECE MARK	REMARKS
1	15B33	1	W16X31	31'-0 7/16"		SQ-2 A992
		2	L6X6X3/8	0'-9"	a67	A36
		1	C12X20.7	1'-3 3/8"	m11	A36
		1	PL3/8"X5 7/8"	0'-9 1/8"	p66	A36
		3	3/4"Ø A325N BOLT	0'-2"		
		12	3/4"Ø A325N BOLT	0'-1 3/4"		

Avenue Fabricating Inc.
1281 Clough Pike
Batavia, OH 45103
(513) 752-1911

DRAWN BY	DATE	
TMc	09/01/2010	
CHKD. BY	DATE	
TAN		
JOB No.	DRG. No.	REV.
10-16	15B33	4

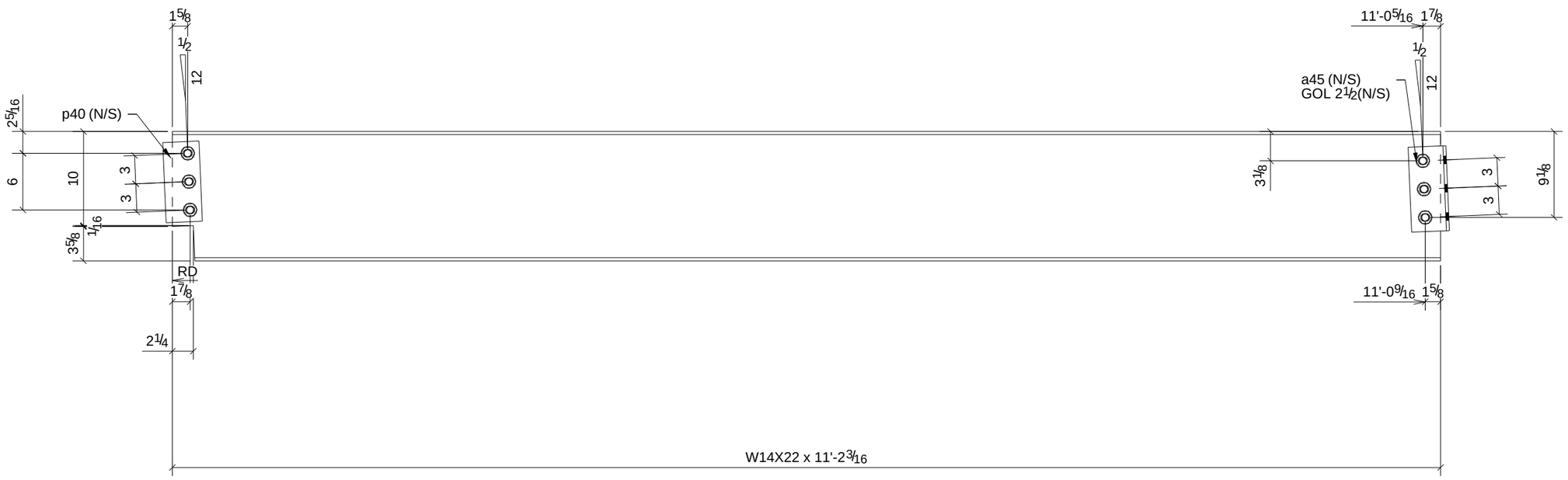

PHASE				
1	2	3	4	5
1	0	0	0	0

ONE - BEAM - 15B34

W	13 11/16"x1/4"
F	5"x5/16"

REV.	DESCRIPTION	DATE	DWN	CHK
A	For Approval & Field Survey	8/30/10	TMc	TAN
0	For Fabrication & F&F	9/15/10	TMc	TAN

GENERAL NOTES

MATERIAL: A992 / A36
ELECTRODES: E70XX LH
REF. DRG.
HOLES: 13/16 DIA. U/N
CONN'S.: -
SURFACE PREP. AND PAINT: SSPC-SP-2 GREY PRIMER DEVOE NA-195 (U.N,)

JOB USE
SHOP
APPROVAL

DESCRIPTION: BEAM
PROJECT NAME: Hamilton High School Phase III
LOCATION: Hamilton City School District - Hamilton
CONTRACTOR: GC Contracting

BILL OF MATERIAL

SHIP	MARK	NO PCS	DESCRIPTION	LENGTH	PIECE MARK	REMARKS
1	15B34	1	W14X22	11'-2 3/16"		SQ-2 A992
		1	L4X4X5/16	0'-9"	a45	A36
		1	PL3/8"X3 7/8"	0'-8 1/2"	p40	A36
		6	3/4"Ø A325N BOLT	0'-1 3/4"		

Avenue Fabricating Inc.
1281 Clough Pike
Batavia, OH 45103
(513) 752-1911

DRAWN BY	DATE	
TMc	09/01/2010	
CHKD. BY	DATE	
TAN		
JOB No.	DRG. No.	REV.
10-16	15B34	4

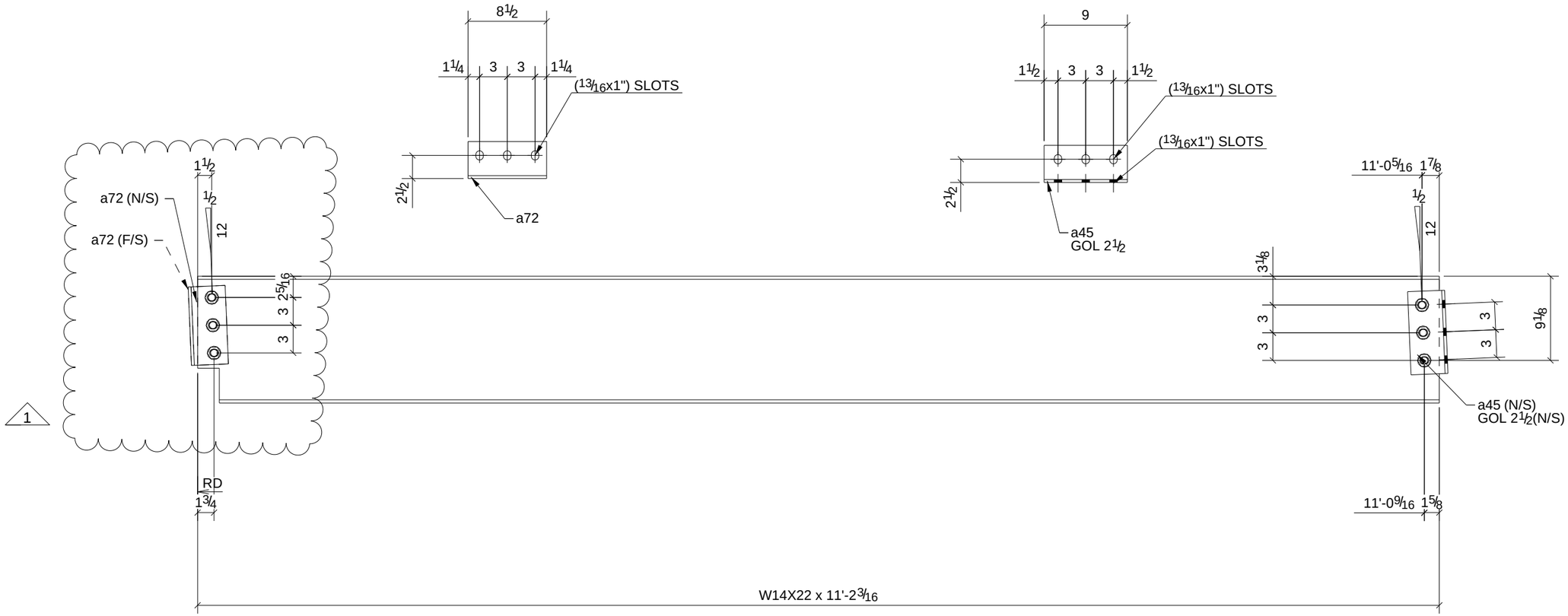

PHASE				
1	2	3	4	5
1	0	0	0	0

ONE - BEAM - 15B34

W	13 11/16"x1/4"
F	5"x5/16"

REV.	DESCRIPTION	DATE	DWN	CHK
A	For Approval & Field Survey	8/30/10	TMc	TAN
1	revised shear bar to angle	9-17-10		
0	For Fabrication & F&F	9/15/10	TMc	TAN

GENERAL NOTES

MATERIAL: A992 / A36
ELECTRODES: E70XX LH
REF. DRG.
HOLES: 13/16 DIA. U/N
CONN'S.: -
SURFACE PREP. AND PAINT: SSPC-SP-2 GREY PRIMER DEVOE NA-195 (U.N,)

JOB USE
SHOP
APPROVAL

BILL OF MATERIAL

SHIP	MARK	NO PCS	DESCRIPTION	LENGTH	PIECE MARK	REMARKS
1	15B34	1	W14X22	11'-2 3/16"		SQ-2 A992
		1	L4X4X5/16	0'-9"	a45	A36
		2	L4X4X5/16	0'-8 1/2"	a72	A36
		3	3/4"Ø A325N BOLT	0'-2"		
		3	3/4"Ø A325N BOLT	0'-1 3/4"		

DESCRIPTION: BEAM
PROJECT NAME: Hamilton High School Phase III
LOCATION: Hamilton City School District - Hamilton
CONTRACTOR: GC Contracting

Avenue Fabricating Inc.
1281 Clough Pike
Batavia, OH 45103
(513) 752-1911

DRAWN BY TMc	DATE 09/01/2010
CHKD. BY TAN	DATE
JOB No. 10-16	DRG. No. 15B34 / REV. 5

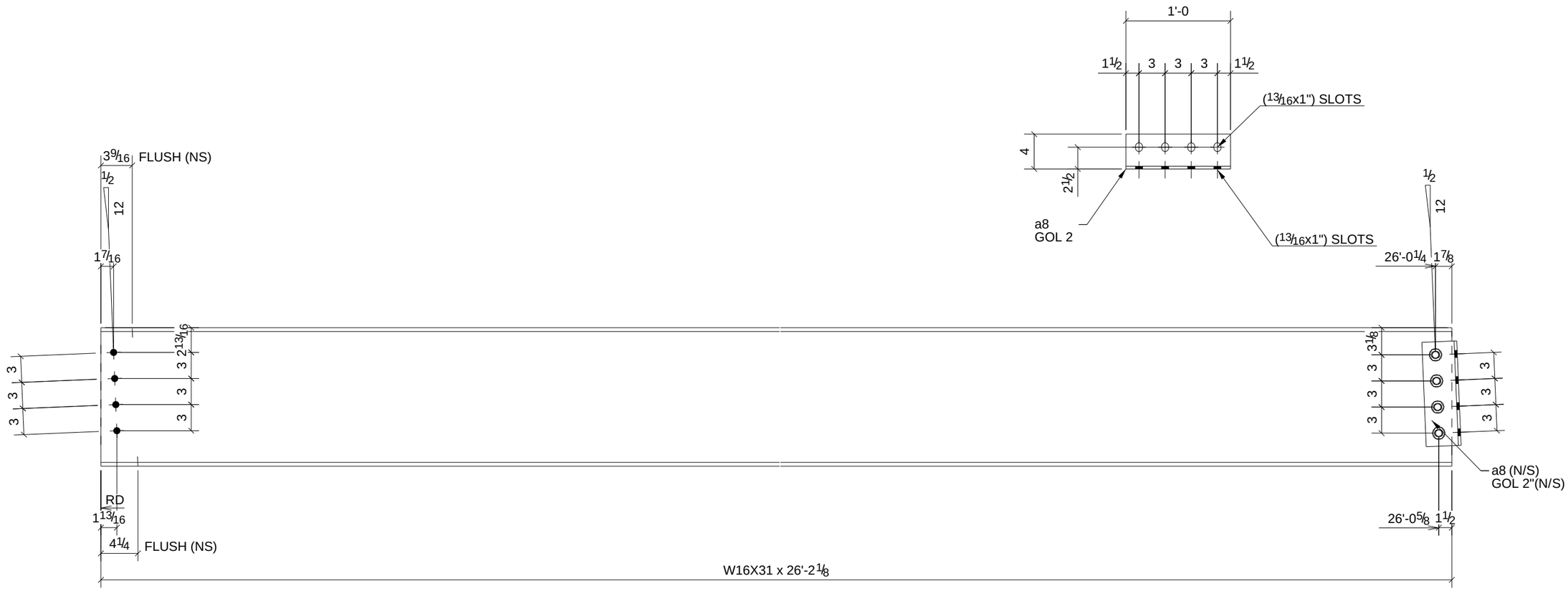

PHASE				
1	2	3	4	5
1	0	0	0	0

ONE - BEAM - 15B35

W	15 7/8"x1/4"
F	5 1/2"x7/16"

BILL OF MATERIAL

SHIP	MARK	NO PCS	DESCRIPTION	LENGTH	PIECE MARK	REMARKS
1	15B35	1	W16X31	26'-2 1/8"		SQ-2 A992
		1	L4X3-1/2X5/16	1'-0"	a8	A36
		4	3/4"Ø A325N BOLT	0'-1 3/4"		

REV.	DESCRIPTION	DATE	DWN	CHK
A	For Approval & Field Survey	8/30/10	TMc	TAN
0	For Fabrication & F&F	9/15/10	TMc	TAN

GENERAL NOTES

MATERIAL: A992 / A36
ELECTRODES: E70XX LH
REF. DRG.
HOLES: 13/16 DIA. U/N
CONN'S.: -
SURFACE PREP. AND PAINT: SSPC-SP-2 GREY PRIMER DEVOE NA-195 (U.N,)

JOB USE
SHOP
APPROVAL

DESCRIPTION: BEAM
PROJECT NAME: Hamilton High School Phase III
LOCATION: Hamilton City School District - Hamilton
CONTRACTOR: GC Contracting

Avenue Fabricating Inc.
1281 Clough Pike
Batavia, OH 45103
(513) 752-1911

DRAWN BY: TMc	DATE: 09/01/2010
CHKD. BY: TAN	DATE:
JOB No.: 10-16	DRG. No.: 15B35 REV.: 4

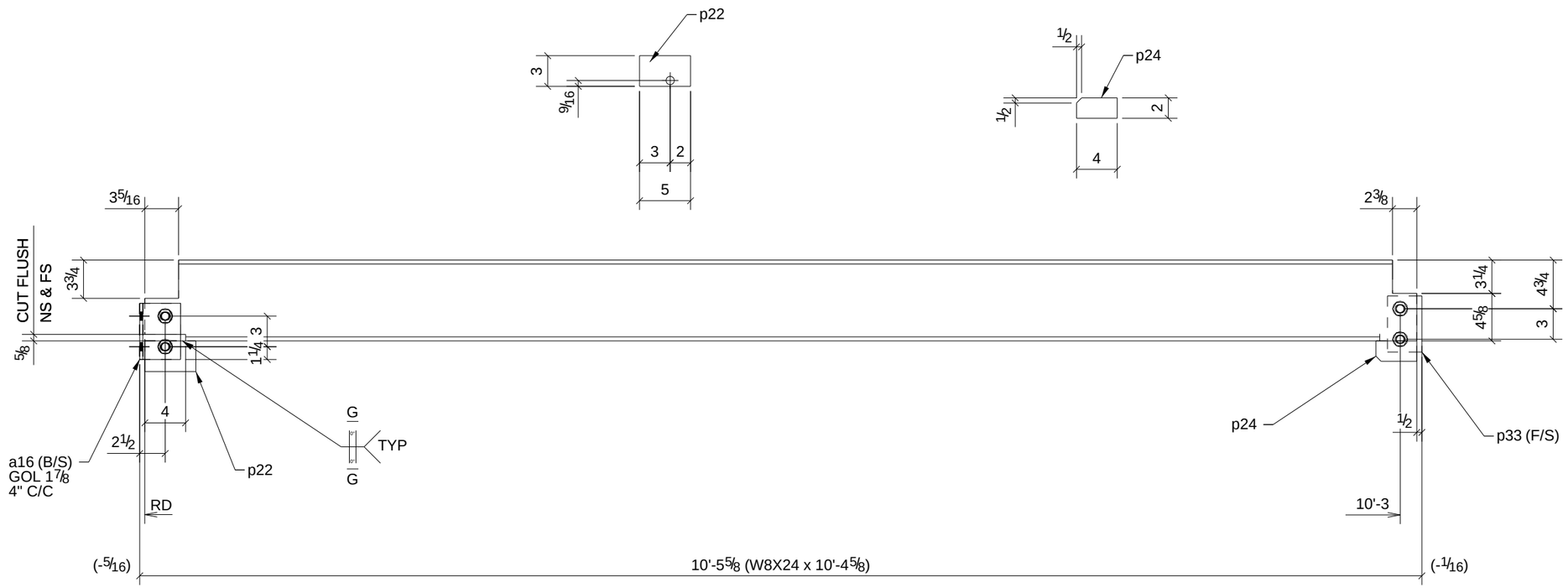

ONE - BEAM - 15B37

PHASE				
1	2	3	4	5
1	0	0	0	0

W	7 15/16"x1/4"
F	6 1/2"x3/8"

REV.	DESCRIPTION	DATE	DWN	CHK
A	For Approval & Field Survey	8/30/10	TMc	TAN
0	For Fabrication & F&F	9/15/10	TMc	TAN

BILL OF MATERIAL

SHIP	MARK	NO PCS	DESCRIPTION	LENGTH	PIECE MARK	REMARKS
1	15B37	1	W8X24	10'-4 5/8"		SQ-2 A992
		2	L4X3-1/2X5/16	0'-5 1/2"	a16	A36
		1	BAR1/4"X3"	0'-5"	p22	A36
		1	BAR1/4"X2"	0'-4"	p24	A36
		1	PL3/8"X3 3/8"	0'-5 1/2"	p33	A36
		2	3/4"Ø A325N BOLT	0'-2"		
		2	3/4"Ø A325N BOLT	0'-1 3/4"		

GENERAL NOTES

MATERIAL: A992 / A36
ELECTRODES: E70XX LH
REF. DRG.
HOLES: 13/16 DIA. U/N
CONN'S.: -
SURFACE PREP. AND PAINT: SSPC-SP-2 GREY PRIMER DEVOE NA-195 (U.N,)

JOB USE
SHOP
APPROVAL

DESCRIPTION: BEAM
PROJECT NAME: Hamilton High School Phase III
LOCATION: Hamilton City School District - Hamilton
CONTRACTOR: GC Contracting

Avenue Fabricating Inc.
1281 Clough Pike
Batavia, OH 45103
(513) 752-1911

DRAWN BY	DATE	
TMc	09/01/2010	
CHKD. BY	DATE	
TAN		
JOB No.	DRG. No.	REV.
10-16	15B37	3

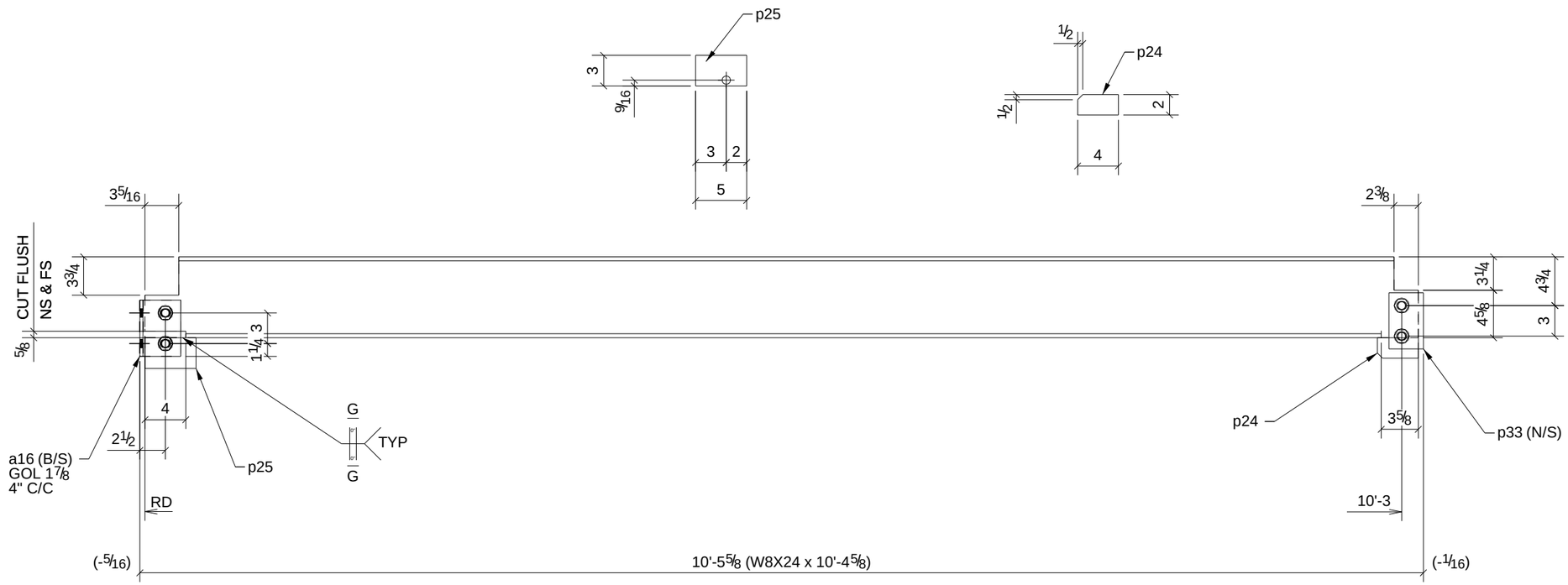

ONE - BEAM - 15B38

PHASE				
1	2	3	4	5
1	0	0	0	0

W	7 15/16"x1/4"
F	6 1/2"x3/8"

BILL OF MATERIAL

SHIP	MARK	NO PCS	DESCRIPTION	LENGTH	PIECE MARK	REMARKS
1	15B38	1	W8X24	10'-4 5/8"		SQ-2 A992
		2	L4X3-1/2X5/16	0'-5 1/2"	a16	A36
		1	BAR1/4"X2"	0'-4"	p24	A36
		1	BAR1/4"X3"	0'-5"	p25	A36
		1	PL3/8"X3 3/8"	0'-5 1/2"	p33	A36
		2	3/4"Ø A325N BOLT	0'-2"		
		2	3/4"Ø A325N BOLT	0'-1 3/4"		

REV.	DESCRIPTION	DATE	DWN	CHK
A	For Approval & Field Survey	8/30/10	TMc	TAN
0	For Fabrication & F&F	9/15/10	TMc	TAN

GENERAL NOTES

MATERIAL: A992 / A36
ELECTRODES: E70XX LH
REF. DRG.
HOLES: 13/16 DIA. U/N
CONN'S.: -
SURFACE PREP. AND PAINT: SSPC-SP-2 GREY PRIMER DEVOE NA-195 (U.N,)

JOB USE
SHOP
APPROVAL

DESCRIPTION: BEAM
PROJECT NAME: Hamilton High School Phase III
LOCATION: Hamilton City School District - Hamilton
CONTRACTOR: GC Contracting

Avenue Fabricating Inc.
1281 Clough Pike
Batavia, OH 45103
(513) 752-1911

DRAWN BY	DATE	
TMc	09/01/2010	
CHKD. BY	DATE	
TAN		
JOB No.	DRG. No.	REV.
10-16	15B38	4

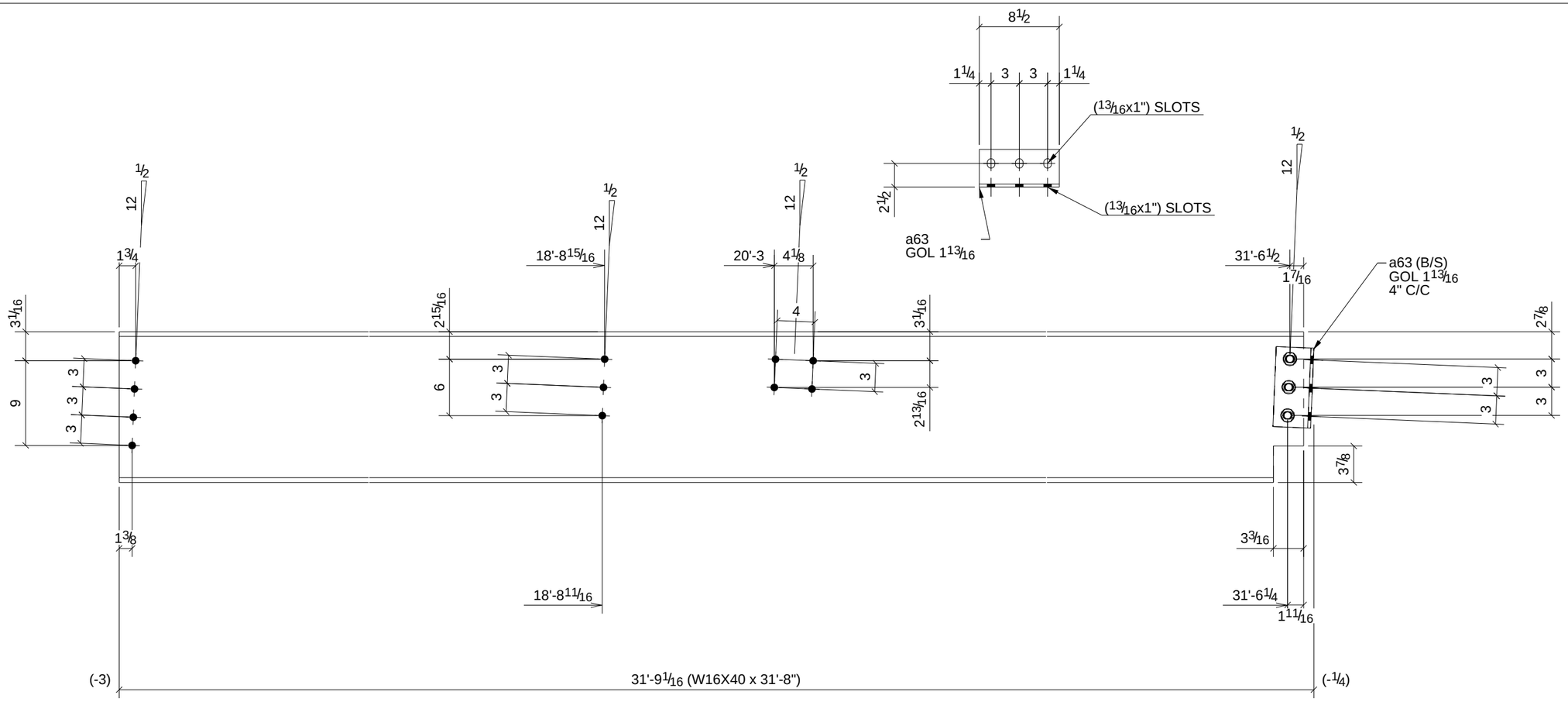

PHASE				
1	2	3	4	5
1	0	0	0	0

ONE - BEAM - 15B4

W	16"x1/4"
F	7"x1/2"

REV.	DESCRIPTION	DATE	DWN	CHK
A	For Approval & Field Survey	8/30/10	TMc	TAN
0	For Fabrication & F&F	9/15/10	TMc	TAN

GENERAL NOTES

MATERIAL: A992 / A36
ELECTRODES: E70XX LH
REF. DRG.
HOLES: 13/16 DIA. U/N
CONN'S.: -
SURFACE PREP. AND PAINT: SSPC-SP-2 GREY PRIMER DEVOE NA-195 (U.N,)

JOB USE
SHOP
APPROVAL

DESCRIPTION: BEAM
PROJECT NAME: Hamilton High School Phase III
LOCATION: Hamilton City School District - Hamilton
CONTRACTOR: GC Contracting

BILL OF MATERIAL

SHIP	MARK	NO PCS	DESCRIPTION	LENGTH	PIECE MARK	REMARKS
1	15B4	1	W16X40	31'-8"		SQ-2 A992
		2	L4X3-1/2X5/16	0'-8 1/2"	a63	A36
		3	3/4"Ø A325N BOLT	0'-2 1/4"		

Avenue Fabricating Inc.
1281 Clough Pike
Batavia, OH 45103
(513) 752-1911

DRAWN BY TMc	DATE 08/30/2010	
CHKD. BY TAN	DATE	
JOB No. 10-16	DRG. No. 15B4	REV. 2

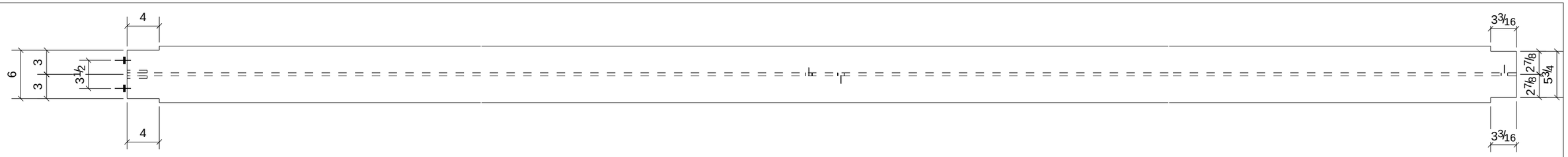

B - B

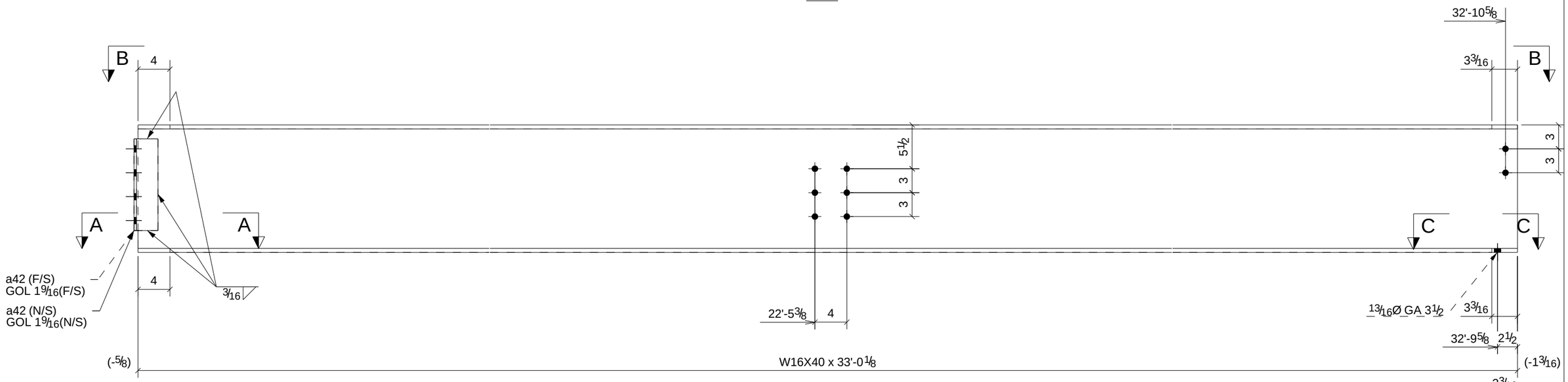

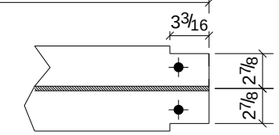

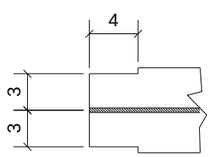

A - A

PHASE				
1	2	3	4	5
1	0	0	0	0

ONE - BEAM - 15B6

W	16"x1/4"
F	7"x1/2"

REV.	DESCRIPTION	DATE	DWN	CHK
A	For Approval & Field Survey	8/30/10	TMc	TAN
0	For Fabrication & F&F	9/15/10	TMc	TAN

GENERAL NOTES

MATERIAL: A992 / A36
ELECTRODES: E70XX LH
REF. DRG.
HOLES: 13/16 DIA. U/N
CONN'S.: -
SURFACE PREP. AND PAINT: SSPC-SP-2 GREY PRIMER DEVOE NA-195 (U.N,)

JOB USE
SHOP
APPROVAL

DESCRIPTION: BEAM
PROJECT NAME: Hamilton High School Phase III
LOCATION: Hamilton City School District - Hamilton
CONTRACTOR: GC Contracting

BILL OF MATERIAL

SHIP	MARK	NO PCS	DESCRIPTION	LENGTH	PIECE MARK	REMARKS
1	15B6	1	W16X40	33'-0 1/8"		SQ-2 A992
		2	L3X3X5/16	0'-11 1/2"	a42	A36

Avenue Fabricating Inc.
1281 Clough Pike
Batavia, OH 45103
(513) 752-1911

DRAWN BY TMc	DATE 08/30/2010
CHKD. BY TAN	DATE
JOB No. 10-16	DRG. No. 15B6 / REV. 2

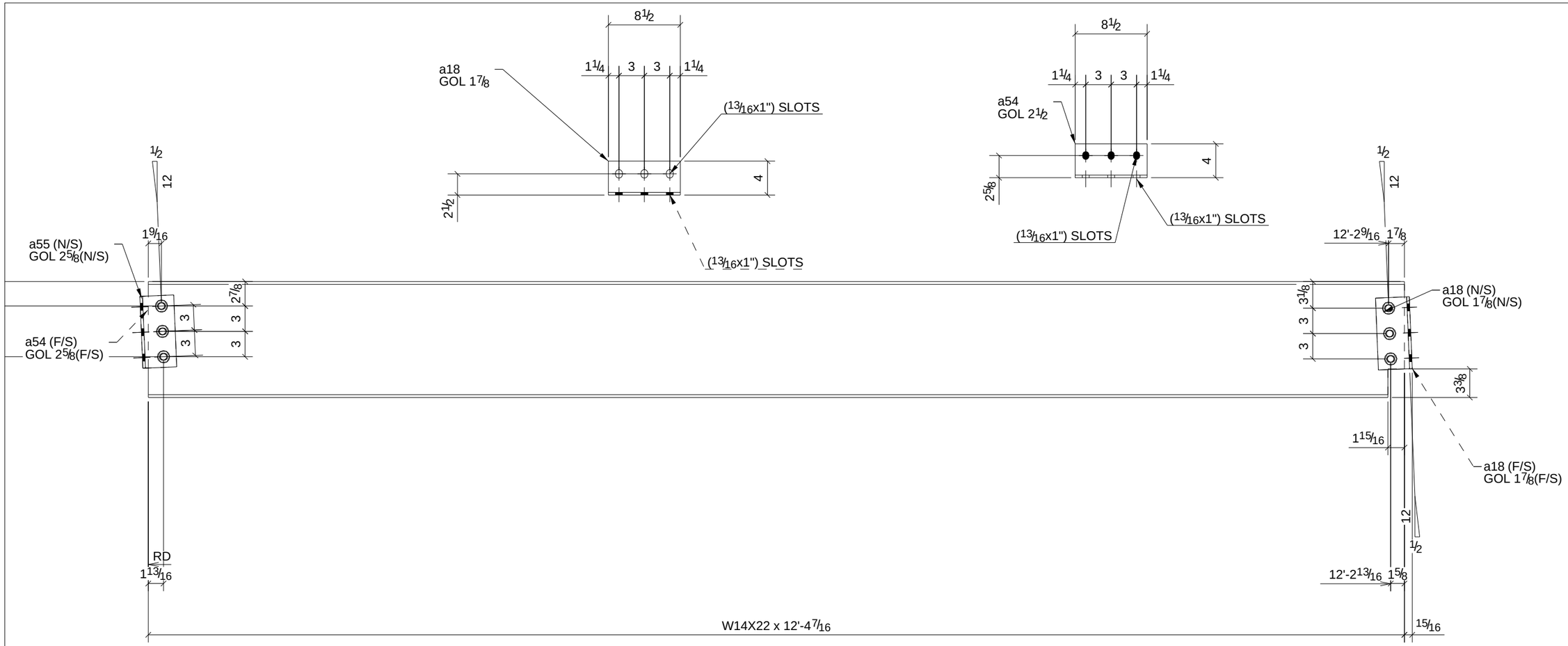

2 - BEAMS - 15B7

PHASE				
1	2	3	4	5
2	0	0	0	0

W	13 11/16"x1/4"
F	5"x5/16"

REV.	DESCRIPTION	DATE	DWN	CHK
A	For Approval & Field Survey	8/30/10	TMc	TAN
0	For Fabrication & F&F	9/15/10	TMc	TAN

GENERAL NOTES

MATERIAL: A992 / A36
ELECTRODES: E70XX LH
REF. DRG.
HOLES: 13/16 DIA. U/N
CONN'S.: -
SURFACE PREP. AND PAINT: SSPC-SP-2 GREY PRIMER DEVOE NA-195 (U.N,)

JOB USE
SHOP
APPROVAL

BILL OF MATERIAL

SHIP	MARK	NO PCS	DESCRIPTION	LENGTH	PIECE MARK	REMARKS
2	15B7	2	W14X22	12'-4 7/16"		SQ-2 A992
		4	L4X3-1/2X5/16	0'-8 1/2"	a18	A36
		2	L4X4X5/16	0'-8 1/2"	a54	A36
		2	L4X4X5/16	0'-8 1/2"	a55	A36
		6	3/4"Ø A325N BOLT	0'-2"		

DESCRIPTION: BEAM
PROJECT NAME: Hamilton High School Phase III
LOCATION: Hamilton City School District - Hamilton
CONTRACTOR: GC Contracting

Avenue Fabricating Inc.
1281 Clough Pike
Batavia, OH 45103
(513) 752-1911

DRAWN BY	DATE	
TMc	09/01/2010	
CHKD. BY	DATE	
TAN		
JOB No.	DRG. No.	REV.
10-16	15B7	2

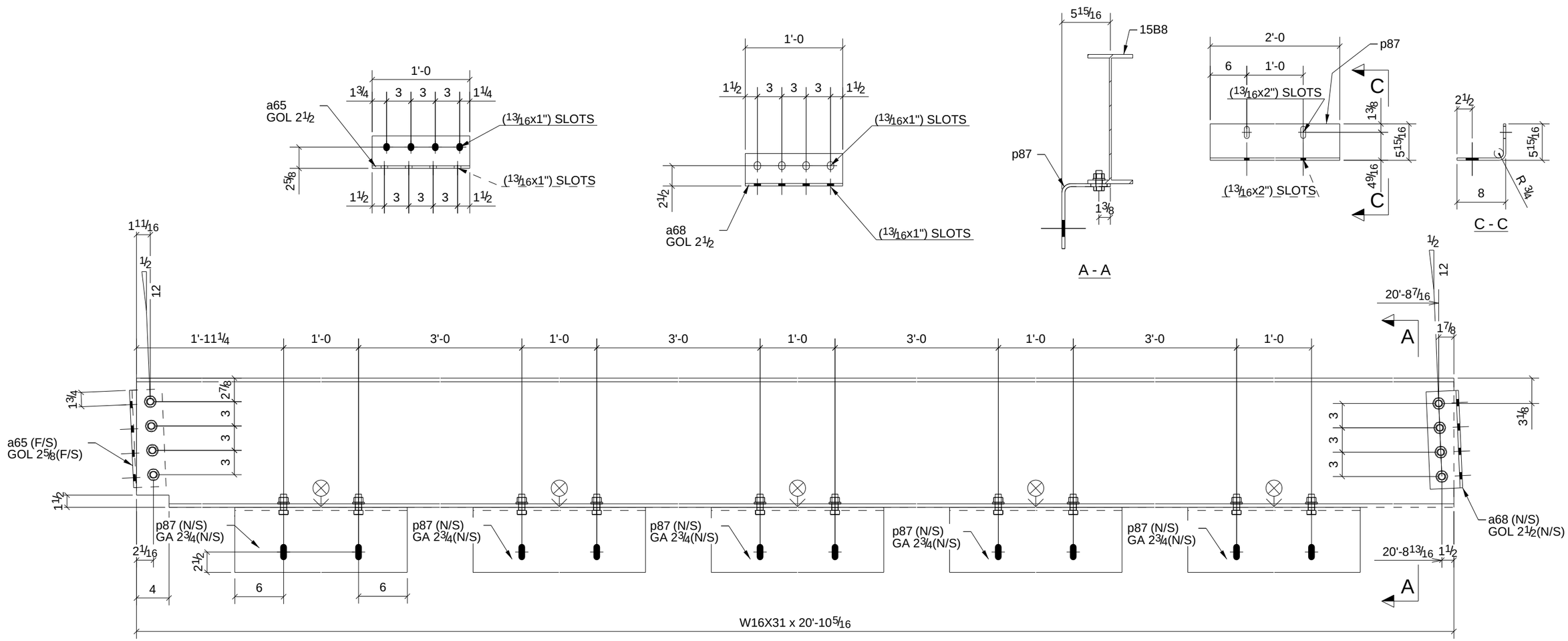

ONE - BEAM - 15B8

PHASE				
1	2	3	4	5
1	0	0	0	0

W	15 7/8"x1/4"
F	5 1/2"x7/16"

REV.	DESCRIPTION	DATE	DWN	CHK
A	For Approval & Field Survey	8/30/10	TMc	TAN
0	For Fabrication & F&F	9/15/10	TMc	TAN

GENERAL NOTES

MATERIAL: A992 / A36
ELECTRODES: E70XX LH
REF. DRG.
HOLES: 13/16 DIA. U/N
CONN'S.: -
SURFACE PREP. AND PAINT: SSPC-SP-2 GREY PRIMER DEVOE NA-195 (U.N,)

JOB USE
SHOP
APPROVAL

DESCRIPTION: BEAM
PROJECT NAME: Hamilton High School Phase III
LOCATION: Hamilton City School District - Hamilton
CONTRACTOR: GC Contracting

BILL OF MATERIAL

SHIP	MARK	NO PCS	DESCRIPTION	LENGTH	PIECE MARK	REMARKS
1	15B8	1	W16X31	20'-10 5/16"		SQ-2 A992
		1	L4X4X5/16	1'-0"	a65	A36
		1	L4X4X5/16	1'-0"	a68	A36
		5	PL3/8"X13 3/16"	2'-0"	p87	A36
		10	3/4"Ø A307 BOLT	0'-2"		
		8	3/4"Ø A325N BOLT	0'-1 3/4"		

Avenue Fabricating Inc.
1281 Clough Pike
Batavia, OH 45103
(513) 752-1911

DRAWN BY	TMc
DATE	08/30/2010
CHKD. BY	TAN
DATE	
JOB No.	10-16
DRG. No.	15B8
REV.	2

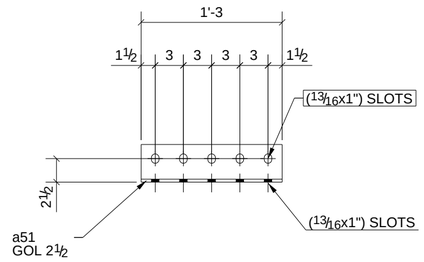

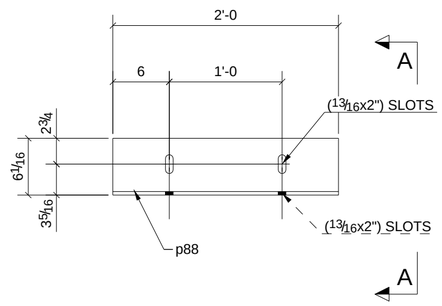

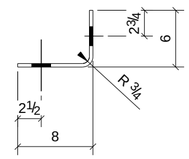

A - A

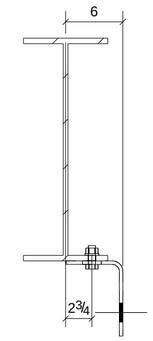

B - B

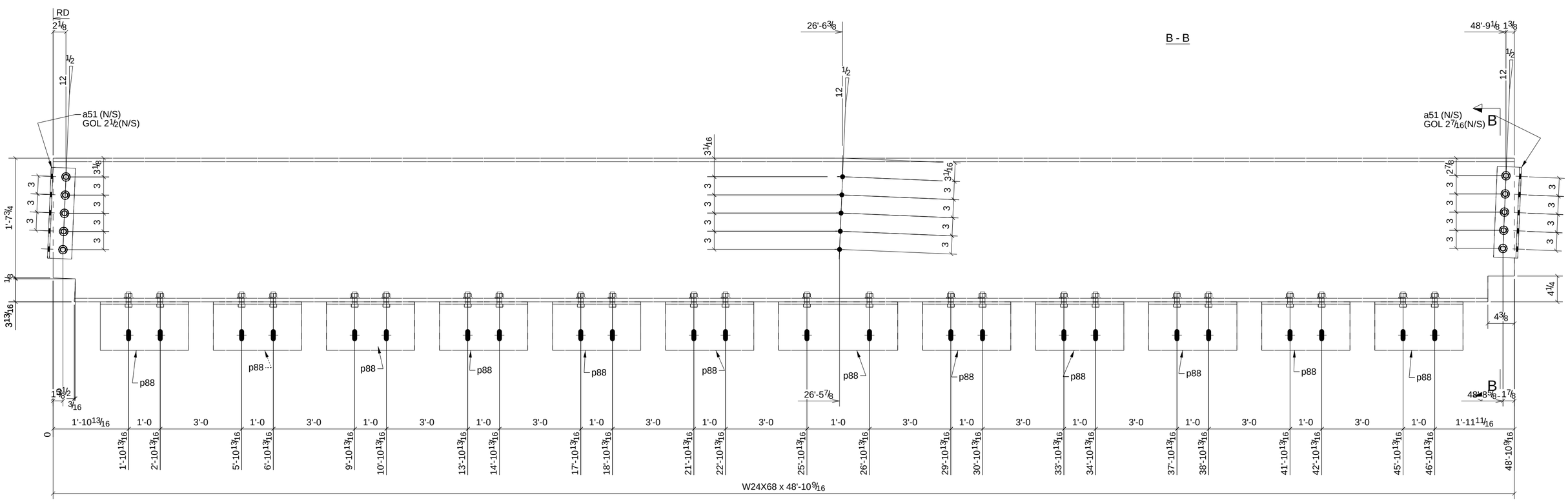

PHASE				
1	2	3	4	5
1	0	0	0	0

ONE - BEAM - 15B9

W	23 11/16"x7/16"
F	9"x9/16"

REV.	DESCRIPTION	DATE	DWN	CHK
A	For Approval & Field Survey	8/30/10	TMc	TAN
0	For Fabrication & F&F	9/15/10	TMc	TAN

GENERAL NOTES

MATERIAL: A992 / A36
ELECTRODES: E70XX LH
REF. DRG.
HOLES: 13/16 DIA. U/N
CONN'S.: -
SURFACE PREP. AND PAINT: SSPC-SP-2 GREY PRIMER DEVOE NA-195 (U.N,)

JOB USE
SHOP
APPROVAL

BILL OF MATERIAL

SHIP	MARK	NO PCS	DESCRIPTION	LENGTH	PIECE MARK	REMARKS
1	15B9	1	W24X68	48'-10 9/16"		SQ-2 A992
		2	L4X4X5/16	1'-3"	a51	A36
		12	PL3/8"X13 1/4"	2'-0"	p88	A36
		24	3/4"Ø A307 BOLT	0'-2"		
		10	3/4"Ø A325N BOLT	0'-2"		

DESCRIPTION: BEAM
PROJECT NAME: Hamilton High School Phase III
LOCATION: Hamilton City School District - Hamilton
CONTRACTOR: GC Contracting

Avenue Fabricating Inc.
1281 Clough Pike
Batavia, OH 45103
(513) 752-1911

DRAWN BY	DATE	
TMc	08/30/2010	
CHKD. BY	DATE	
TAN		
JOB No.	DRG. No.	REV.
10-16	15B9	2

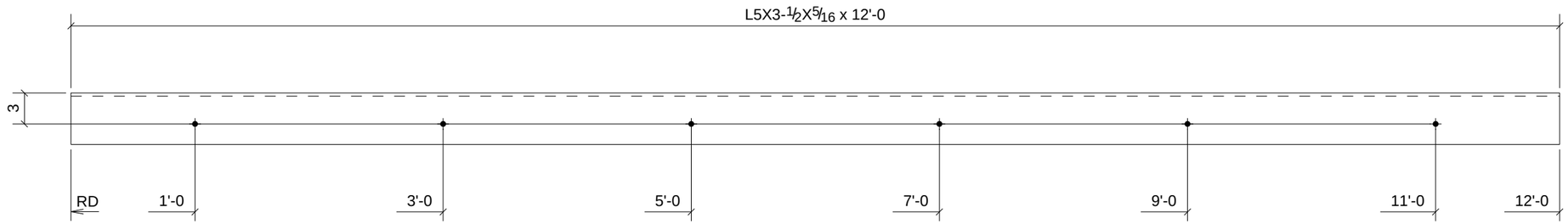

PHASE				
1	2	3	4	5
6	0	0	0	0

6 - ANGLES - 17A1

REV.	DESCRIPTION	DATE	DWN	CHK
A	For Approval & Field Survey	8/30/10	TMc	TAN
0	For Fabrication & F&F	9/15/10	TMc	TAN

GENERAL NOTES

MATERIAL: A992 / A36
ELECTRODES: E70XX LH
REF. DRG.
HOLES: 13/16 DIA. U/N
CONN'S.: -
SURFACE PREP. AND PAINT: SSPC-SP-2 GREY PRIMER DEVOE NA-195 (U.N,)

JOB USE
SHOP
APPROVAL

DESCRIPTION: ANGLE
PROJECT NAME: Hamilton High School Phase III
LOCATION: Hamilton City School District - Hamilton
CONTRACTOR: GC Contracting

BILL OF MATERIAL

SHIP	MARK	NO PCS	DESCRIPTION	LENGTH	PIECE MARK	REMARKS
6	17A1	6	L5X3-1/2X5/16	12'-0"		SQ-2 A36

Avenue Fabricating Inc.
1281 Clough Pike
Batavia, OH 45103
(513) 752-1911

DRAWN BY	DATE	
TMc	08/20/2010	
CHKD. BY	DATE	
TAN		
JOB No.	DRG. No.	REV.
10-16	17A1	3

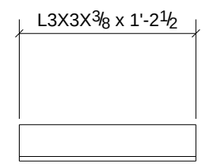

PHASE				
1	2	3	4	5
2	0	0	0	0

2 - ANGLES - 17A10

REV.	DESCRIPTION	DATE	DWN	CHK
A	For Approval & Field Survey	8/30/10	TMc	TAN
0	For Fabrication & F&F	9/15/10	TMc	TAN

GENERAL NOTES

MATERIAL: A992 / A36
ELECTRODES: E70XX LH
REF. DRG.
HOLES: 13/16 DIA. U/N
CONN'S.: -
SURFACE PREP. AND PAINT: SSPC-SP-2 GREY PRIMER DEVOE NA-195 (U.N,)

JOB USE
SHOP
APPROVAL

DESCRIPTION: ANGLE
PROJECT NAME: Hamilton High School Phase III
LOCATION: Hamilton City School District - Hamilton
CONTRACTOR: GC Contracting

BILL OF MATERIAL

SHIP	MARK	NO PCS	DESCRIPTION	LENGTH	PIECE MARK	REMARKS
2	17A10	2	L3X3X3/8	1'-2 1/2"		SQ-2 A36

Avenue Fabricating Inc.
1281 Clough Pike
Batavia, OH 45103
(513) 752-1911

DRAWN BY	DATE	
TMc	09/02/2010	
CHKD. BY	DATE	
TAN		
JOB No.	DRG. No.	REV.
10-16	17A10	2

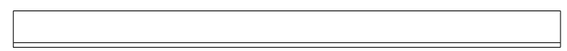

2 - ANGLES - 17A11

PHASE				
1	2	3	4	5
2	0	0	0	0

REV.	DESCRIPTION	DATE	DWN	CHK
A	For Approval & Field Survey	8/30/10	TMc	TAN
0	For Fabrication & F&F	9/15/10	TMc	TAN

GENERAL NOTES

MATERIAL: A992 / A36
ELECTRODES: E70XX LH
REF. DRG.
HOLES: 13/16 DIA. U/N
CONN'S.: -
SURFACE PREP. AND PAINT: SSPC-SP-2 GREY PRIMER DEVOE NA-195 (U.N,)

JOB USE
SHOP
APPROVAL

DESCRIPTION: ANGLE

PROJECT NAME: Hamilton High School Phase III
LOCATION: Hamilton City School District - Hamilton

CONTRACTOR: GC Contracting

BILL OF MATERIAL

SHIP	MARK	NO PCS	DESCRIPTION	LENGTH	PIECE MARK	REMARKS
2	17A11	2	L3X3X3/8	3'-9"		SQ-2 A36

Avenue Fabricating Inc.
1281 Clough Pike
Batavia, OH 45103
(513) 752-1911

DRAWN BY	DATE	
TMc	09/02/2010	
CHKD. BY	DATE	
TAN		
JOB No.	DRG. No.	REV.
10-16	17A11	2

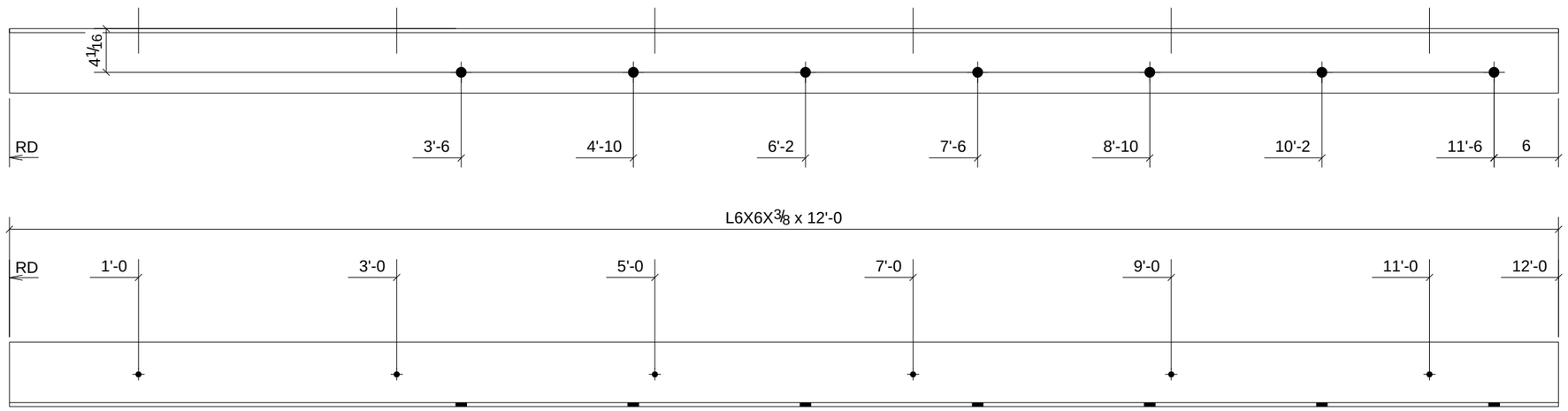

PHASE				
1	2	3	4	5
3	0	0	0	0

3 - ANGLES - 17A2

REV.	DESCRIPTION	DATE	DWN	CHK
A	For Approval & Field Survey	8/30/10	TMc	TAN
0	For Fabrication & F&F	9/15/10	TMc	TAN

GENERAL NOTES

MATERIAL: A992 / A36
ELECTRODES: E70XX LH
REF. DRG.
HOLES: 13/16 DIA. U/N
CONN'S.: -
SURFACE PREP. AND PAINT: SSPC-SP-2 GREY PRIMER DEVOE NA-195 (U.N,)

JOB USE
SHOP
APPROVAL

DESCRIPTION: ANGLE
PROJECT NAME: Hamilton High School Phase III
LOCATION: Hamilton City School District - Hamilton
CONTRACTOR: GC Contracting

BILL OF MATERIAL

SHIP	MARK	NO PCS	DESCRIPTION	LENGTH	PIECE MARK	REMARKS
3	17A2	3	L6X6X3/8	12'-0"		SQ-2 A36

Avenue Fabricating Inc.
1281 Clough Pike
Batavia, OH 45103
(513) 752-1911

DRAWN BY TMc	DATE 09/02/2010	
CHKD. BY TAN	DATE	
JOB No. 10-16	DRG. No. 17A2	REV. 2

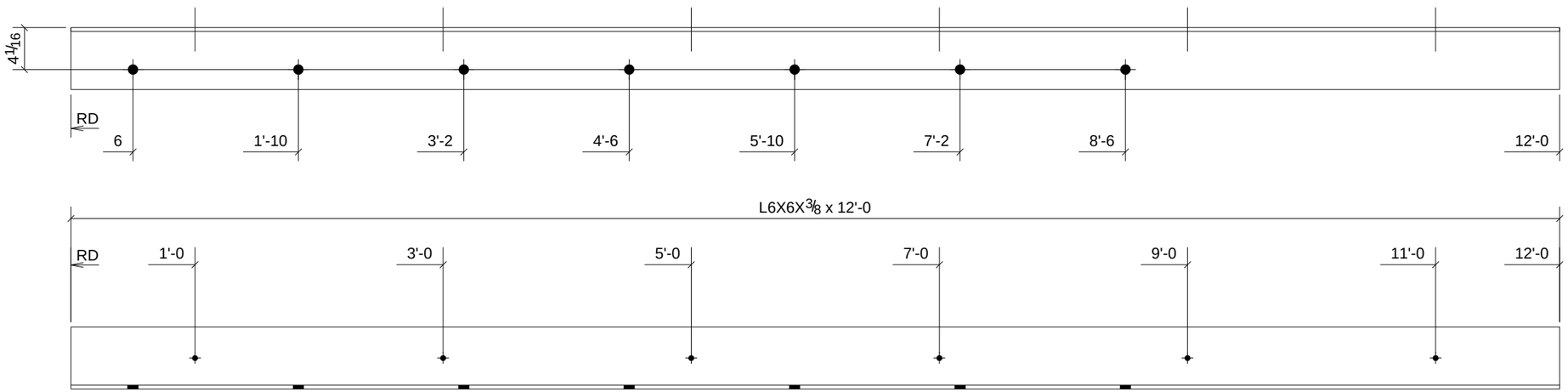

3 - ANGLES - 17A3

PHASE				
1	2	3	4	5
3	0	0	0	0

BILL OF MATERIAL

SHIP	MARK	NO PCS	DESCRIPTION	LENGTH	PIECE MARK	REMARKS
3	17A3	3	L6X6X3/8	12'-0"		SQ-2 A36

REV.	DESCRIPTION	DATE	DWN	CHK
A	For Approval & Field Survey	8/30/10	TMc	TAN
0	For Fabrication & F&F	9/15/10	TMc	TAN

GENERAL NOTES

MATERIAL: A992 / A36
ELECTRODES: E70XX LH
REF. DRG.
HOLES: 13/16 DIA. U/N
CONN'S.: -
SURFACE PREP. AND PAINT: SSPC-SP-2 GREY PRIMER DEVOE NA-195 (U.N,)

JOB USE
SHOP
APPROVAL

DESCRIPTION: ANGLE

PROJECT NAME: Hamilton High School Phase III
LOCATION: Hamilton City School District - Hamilton

CONTRACTOR: GC Contracting

Avenue Fabricating Inc.
1281 Clough Pike
Batavia, OH 45103
(513) 752-1911

DRAWN BY	DATE	
TMc	09/02/2010	
CHKD. BY	DATE	
TAN		
JOB No.	DRG. No.	REV.
10-16	17A3	2

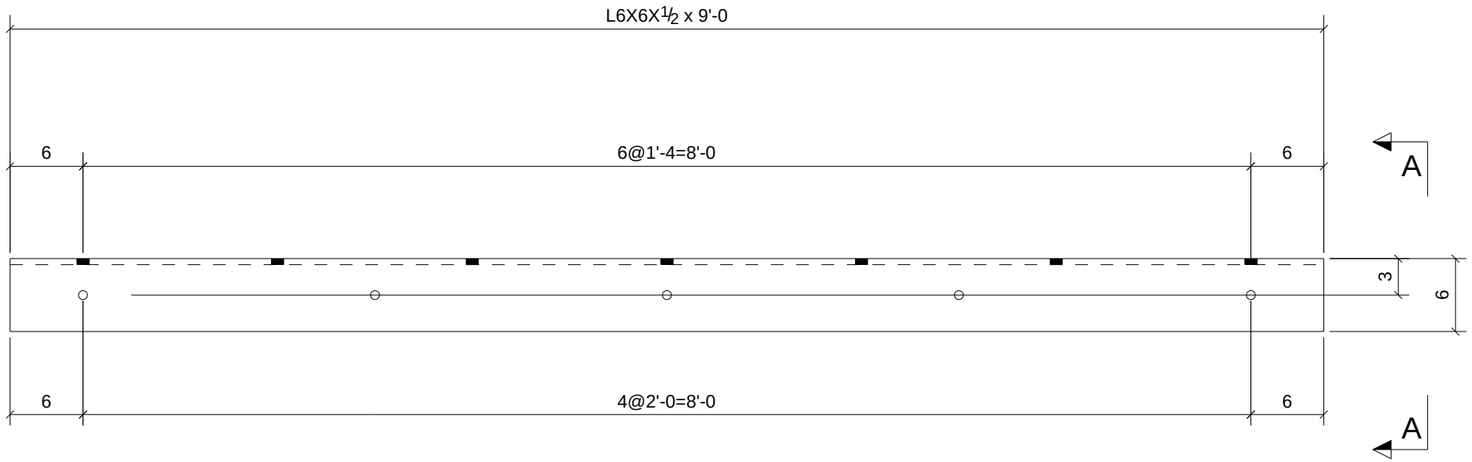

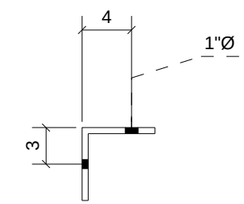

A - A

REV.	DESCRIPTION	DATE	DWN	CHK
A	For Approval & Field Survey	8/30/10	TMc	TAN
0	For Fabrication & F&F	9/15/10	TMc	TAN

GENERAL NOTES

MATERIAL: A992 / A36
ELECTRODES: E70XX LH
REF. DRG.
HOLES: 13/16 DIA. U/N
CONN'S.: -
SURFACE PREP. AND PAINT: SSPC-SP-2 GREY PRIMER DEVOE NA-195 (U.N,)

JOB USE
SHOP
APPROVAL

DESCRIPTION: ANGLE
PROJECT NAME: Hamilton High School Phase III
LOCATION: Hamilton City School District - Hamilton
CONTRACTOR: GC Contracting

2 - ANGLES - 17A4

PHASE				
1	2	3	4	5
2	0	0	0	0

BILL OF MATERIAL

SHIP	MARK	NO PCS	DESCRIPTION	LENGTH	PIECE MARK	REMARKS
2	17A4	2	L6X6X1/2	9'-0"		SQ-2 A36

Avenue Fabricating Inc.
1281 Clough Pike
Batavia, OH 45103
(513) 752-1911

DRAWN BY	DATE	
TMc	08/30/2010	
CHKD. BY: TAN	DATE	
JOB No.: 10-16	DRG. No.: 17A4	REV.: 3

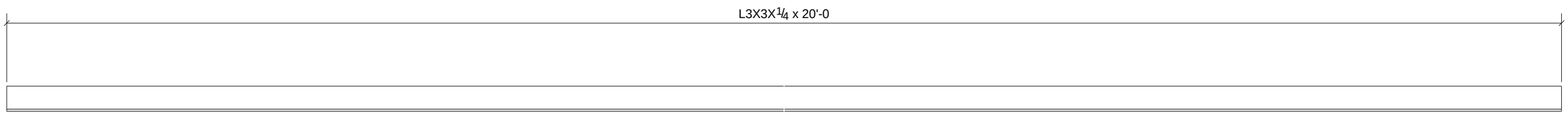

PHASE				
1	2	3	4	5
14	0	0	0	0

14 - ANGLES - 17A7

REV.	DESCRIPTION	DATE	DWN	CHK
A	For Approval & Field Survey	8/30/10	TMc	TAN
0	For Fabrication & F&F	9/15/10	TMc	TAN

GENERAL NOTES

MATERIAL: A992 / A36
ELECTRODES: E70XX LH
REF. DRG.
HOLES: 13/16 DIA. U/N
CONN'S.: -
SURFACE PREP. AND PAINT: SSPC-SP-2 GREY PRIMER DEVOE NA-195 (U.N,)

JOB USE
SHOP
APPROVAL

DESCRIPTION: ANGLE
PROJECT NAME: Hamilton High School Phase III
LOCATION: Hamilton City School District - Hamilton
CONTRACTOR: GC Contracting

BILL OF MATERIAL

SHIP	MARK	NO PCS	DESCRIPTION	LENGTH	PIECE MARK	REMARKS
14	17A7	14	L3X3X1/4	20'-0"		SQ-2 A36

Avenue Fabricating Inc.
1281 Clough Pike
Batavia, OH 45103
(513) 752-1911

DRAWN BY: TMc	DATE: 09/02/2010
CHKD. BY: TAN	DATE:
JOB No.: 10-16	DRG. No.: 17A7 REV.: 2

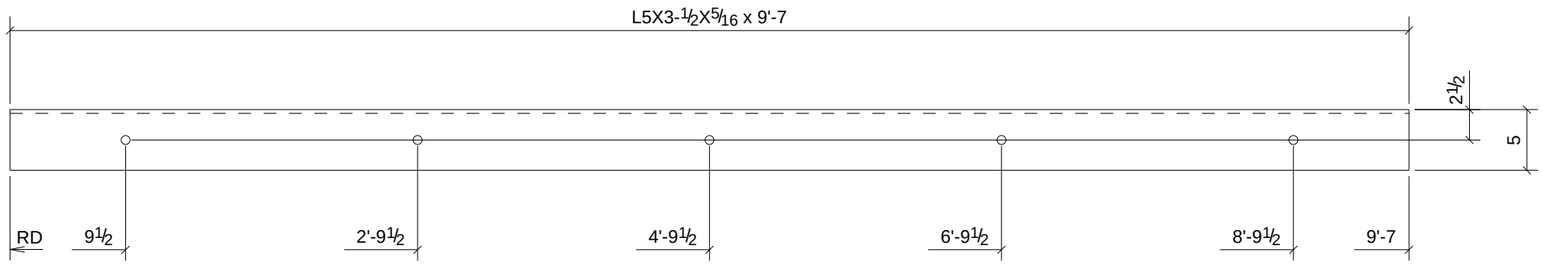

REV.	DESCRIPTION	DATE	DWN	CHK
A	For Approval & Field Survey	8/30/10	TMc	TAN
0	For Fabrication & F&F	9/15/10	TMc	TAN

GENERAL NOTES

MATERIAL: A992 / A36
ELECTRODES: E70XX LH
REF. DRG.
HOLES: 13/16 DIA. U/N
CONN'S.: -
SURFACE PREP. AND PAINT: SSPC-SP-2 GREY PRIMER DEVOE NA-195 (U.N,)

JOB USE
SHOP
APPROVAL

DESCRIPTION: ANGLE
PROJECT NAME: Hamilton High School Phase III
LOCATION: Hamilton City School District - Hamilton
CONTRACTOR: GC Contracting

2 - ANGLES - 17A5

PHASE				
1	2	3	4	5
2	0	0	0	0

BILL OF MATERIAL

SHIP	MARK	NO PCS	DESCRIPTION	LENGTH	PIECE MARK	REMARKS
2	17A5	2	L5X3-1/2X5/16	9'-7"		SQ-2 A36

Avenue Fabricating Inc.
1281 Clough Pike
Batavia, OH 45103
(513) 752-1911

DRAWN BY	DATE	
TMc	08/20/2010	
CHKD. BY	DATE	
TAN		
JOB No.	DRG. No.	REV.
10-16	17A5	3

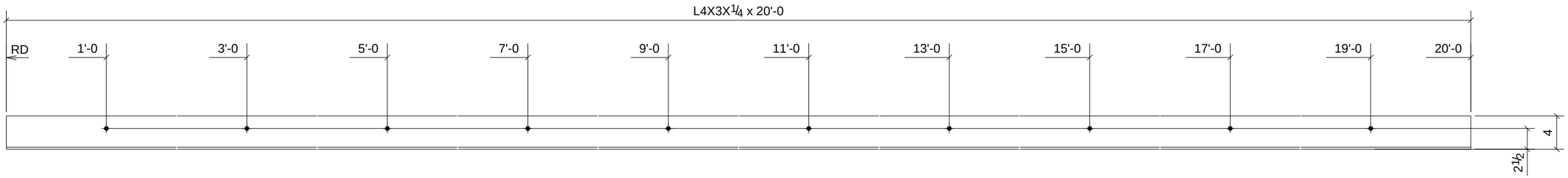

PHASE				
1	2	3	4	5
2	0	0	0	0

2 - ANGLES - 17A8

REV.	DESCRIPTION	DATE	DWN	CHK
A	For Approval & Field Survey	8/30/10	TMc	TAN
0	For Fabrication & F&F	9/15/10	TMc	TAN

GENERAL NOTES

MATERIAL: A992 / A36
ELECTRODES: E70XX LH
REF. DRG.
HOLES: 13/16 DIA. U/N
CONN'S.: -
SURFACE PREP. AND PAINT: SSPC-SP-2 GREY PRIMER DEVOE NA-195 (U.N,)

JOB USE
SHOP
APPROVAL

DESCRIPTION: ANGLE
PROJECT NAME: Hamilton High School Phase III
LOCATION: Hamilton City School District - Hamilton
CONTRACTOR: GC Contracting

BILL OF MATERIAL

SHIP	MARK	NO PCS	DESCRIPTION	LENGTH	PIECE MARK	REMARKS
2	17A8	2	L4X3X1/4	20'-0"		SQ-2 A36

Avenue Fabricating Inc.
1281 Clough Pike
Batavia, OH 45103
(513) 752-1911

DRAWN BY	DATE	
TMc	09/02/2010	
CHKD. BY	DATE	
TAN		
JOB No.	DRG. No.	REV.
10-16	17A8	2

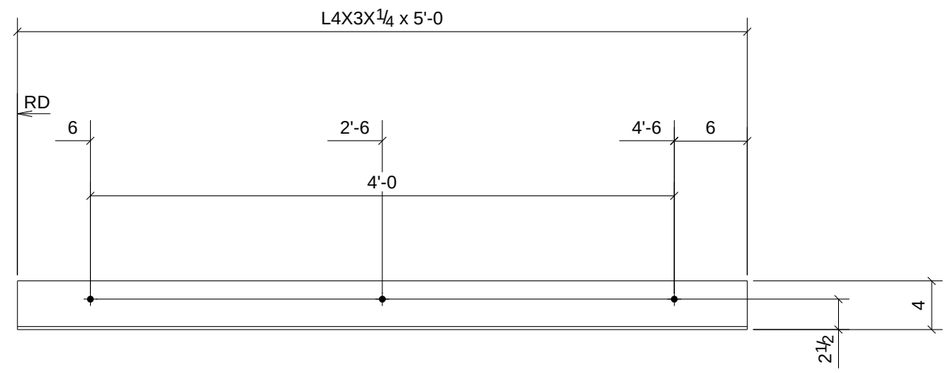

PHASE				
1	2	3	4	5
2	0	0	0	0

2 - ANGLES - 17A9

BILL OF MATERIAL

SHIP	MARK	NO PCS	DESCRIPTION	LENGTH	PIECE MARK	REMARKS
2	17A9	2	L4X3X1/4	5'-0"		SQ-2 A36

REV.	DESCRIPTION	DATE	DWN	CHK
A	For Approval & Field Survey	8/30/10	TMc	TAN
0	For Fabrication & F&F	9/15/10	TMc	TAN

GENERAL NOTES

MATERIAL: A992 / A36
ELECTRODES: E70XX LH
REF. DRG.
HOLES: 13/16 DIA. U/N
CONN'S.: -
SURFACE PREP. AND PAINT: SSPC-SP-2 GREY PRIMER DEVOE NA-195 (U.N,)

JOB USE
SHOP
APPROVAL

DESCRIPTION: ANGLE

PROJECT NAME: Hamilton High School Phase III
LOCATION: Hamilton City School District - Hamilton

CONTRACTOR: GC Contracting

Avenue Fabricating Inc.
1281 Clough Pike
Batavia, OH 45103
(513) 752-1911

DRAWN BY	DATE	
TMc	09/02/2010	
CHKD. BY	DATE	
TAN		
JOB No.	DRG. No.	REV.
10-16	17A9	2

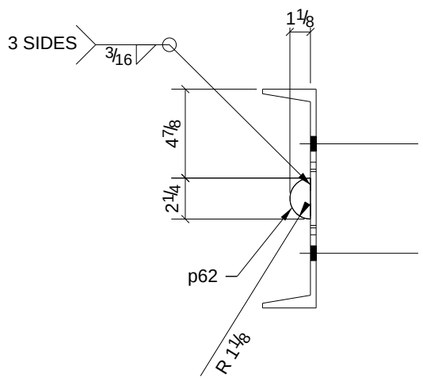

A - A

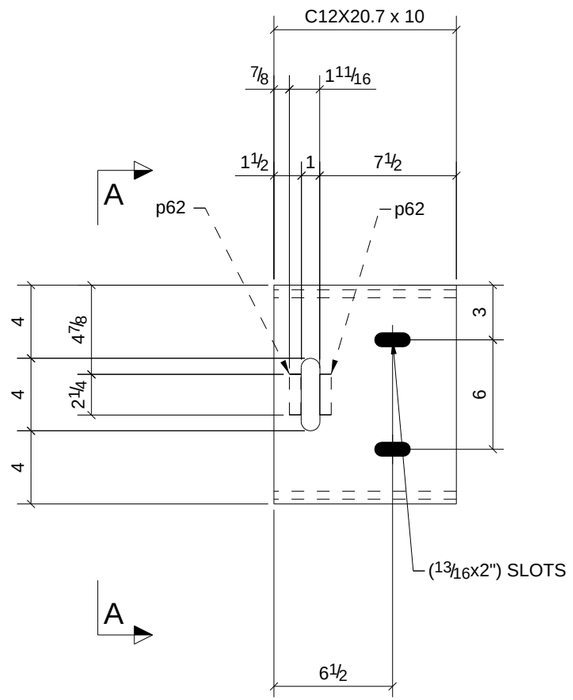

4 - CHANNELS - 17M1

PHASE				
1	2	3	4	5
4	0	0	0	0

BILL OF MATERIAL

SHIP	MARK	NO PCS	DESCRIPTION	LENGTH	PIECE MARK	REMARKS
4	17M1	4	C12X20.7	0'-10"		SQ-2 A36
		8	PL5/8"X1 15/16"	0'-1 15/16"	p62	A36

REV.	DESCRIPTION	DATE	DWN	CHK
A	For Approval & Field Survey	8/30/10	TMc	TAN
0	For Fabrication & F&F	9/15/10	TMc	TAN

GENERAL NOTES

MATERIAL: A992 / A36
ELECTRODES: E70XX LH
REF. DRG.
HOLES: 13/16 DIA. U/N
CONN'S.: -
SURFACE PREP. AND PAINT: SSPC-SP-2 GREY PRIMER DEVOE NA-195 (U.N,)

JOB USE
SHOP
APPROVAL

DESCRIPTION: CHANNEL

PROJECT NAME: Hamilton High School Phase III
LOCATION: Hamilton City School District - Hamilton

CONTRACTOR: GC Contracting

Avenue Fabricating Inc.
1281 Clough Pike
Batavia, OH 45103
(513) 752-1911

DRAWN BY	DATE	
TMc	08/24/2010	
CHKD. BY	DATE	
TAN		
JOB No.	DRG. No.	REV.
10-16	17M1	2

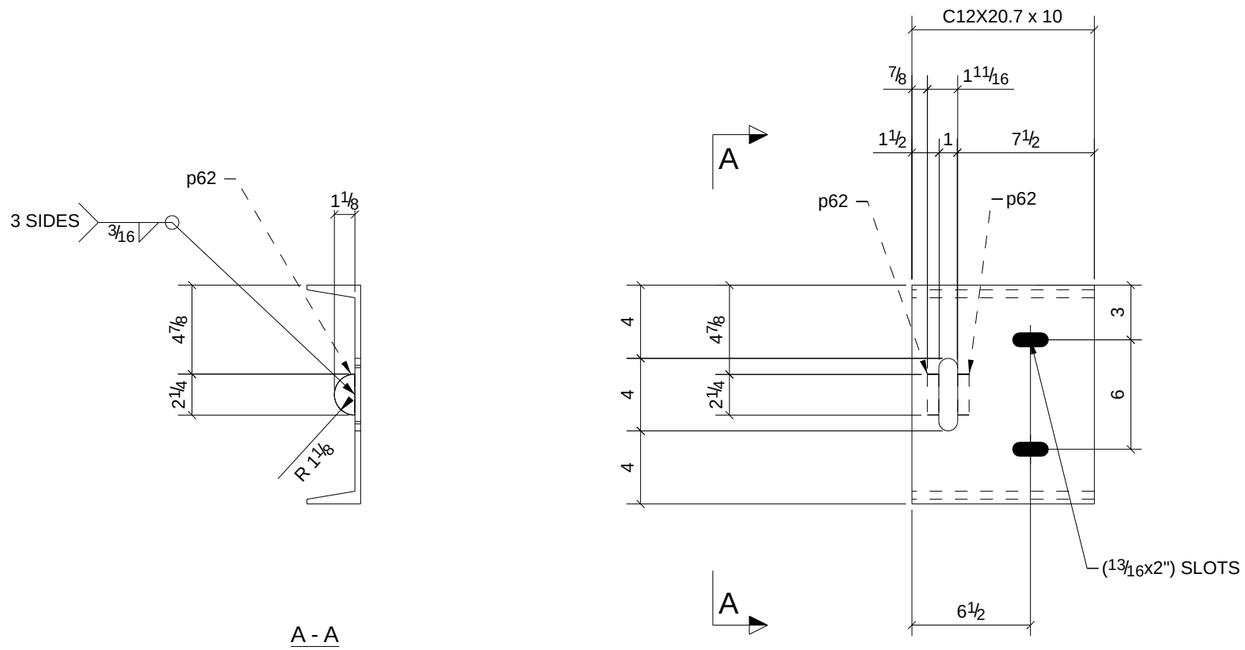

REV.	DESCRIPTION	DATE	DWN	CHK
A	For Approval & Field Survey	8/30/10	TMc	TAN
0	For Fabrication & F&F	9/15/10	TMc	TAN

2 - CHANNELS - 17M2

PHASE				
1	2	3	4	5
2	0	0	0	0

GENERAL NOTES

MATERIAL: A992 / A36
ELECTRODES: E70XX LH
REF. DRG.
HOLES: 13/16 DIA. U/N
CONN'S.: -
SURFACE PREP. AND PAINT: SSPC-SP-2 GREY PRIMER DEVOE NA-195 (U.N,)

JOB USE
SHOP
APPROVAL

DESCRIPTION: CHANNEL
PROJECT NAME: Hamilton High School Phase III
LOCATION: Hamilton City School District - Hamilton
CONTRACTOR: GC Contracting

BILL OF MATERIAL

SHIP	MARK	NO PCS	DESCRIPTION	LENGTH	PIECE MARK	REMARKS
2	17M2	2	C12X20.7	0'-10"		SQ-2 A36
		4	PL5/8"X1 15/16"	0'-1 15/16"	p62	A36

Avenue Fabricating Inc.
1281 Clough Pike
Batavia, OH 45103
(513) 752-1911

DRAWN BY	DATE	
TMc	08/24/2010	
CHKD. BY	DATE	
TAN		
JOB No.	DRG. No.	REV.
10-16	17M2	2

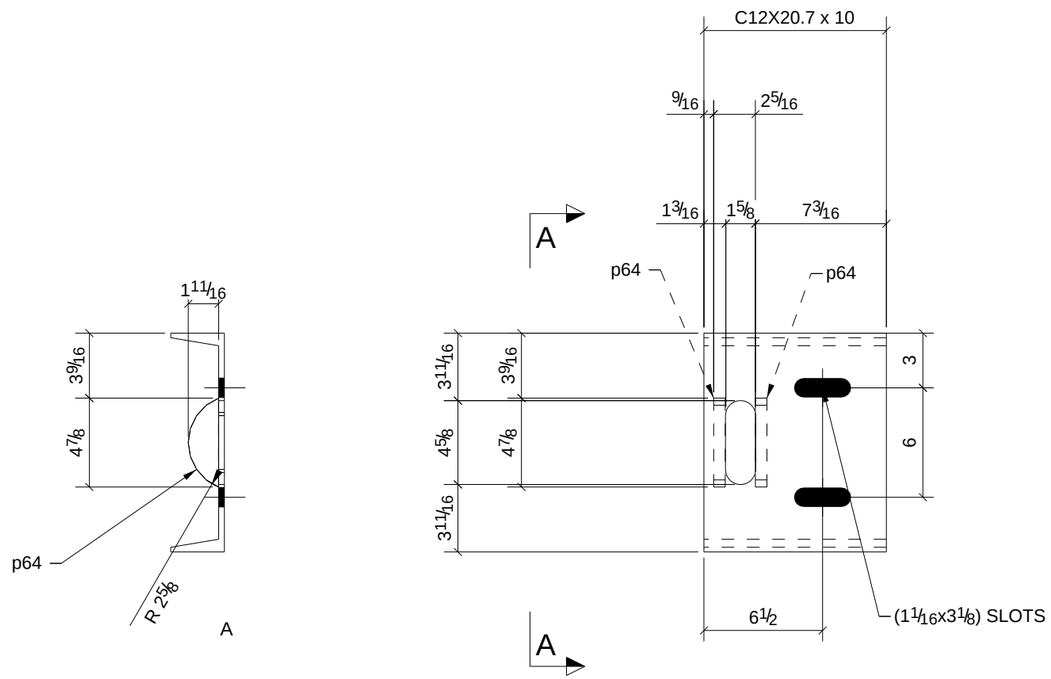

4 - CHANNELS - 17M3

PHASE				
1	2	3	4	5
4	0	0	0	0

BILL OF MATERIAL

SHIP	MARK	NO PCS	DESCRIPTION	LENGTH	PIECE MARK	REMARKS
4	17M3	4	C12X20.7	0'-10"		SQ-2 A36
		8	PL5/8"X1 11/16"	0'-4 7/8"	p64	A36

REV.	DESCRIPTION	DATE	DWN	CHK
A	For Approval & Field Survey	8/30/10	TMc	TAN
0	For Fabrication & F&F	9/15/10	TMc	TAN

GENERAL NOTES

MATERIAL: A992 / A36
ELECTRODES: E70XX LH
REF. DRG.
HOLES: 13/16 DIA. U/N
CONN'S.: -
SURFACE PREP. AND PAINT: SSPC-SP-2 GREY PRIMER DEVOE NA-195 (U.N,)

JOB USE
SHOP
APPROVAL

DESCRIPTION: CHANNEL
PROJECT NAME: Hamilton High School Phase III
LOCATION: Hamilton City School District - Hamilton
CONTRACTOR: GC Contracting

Avenue Fabricating Inc.
1281 Clough Pike
Batavia, OH 45103
(513) 752-1911

DRAWN BY	DATE	
TMc	08/24/2010	
CHKD. BY	DATE	
TAN		
JOB No.	DRG. No.	REV.
10-16	17M3	2

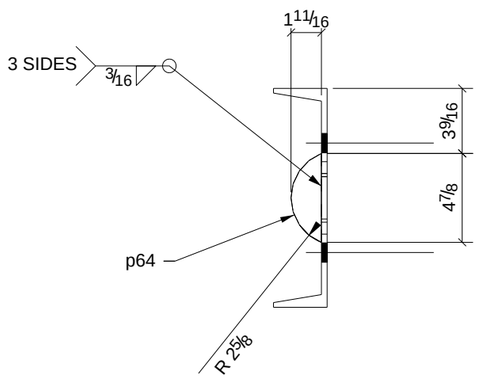

A

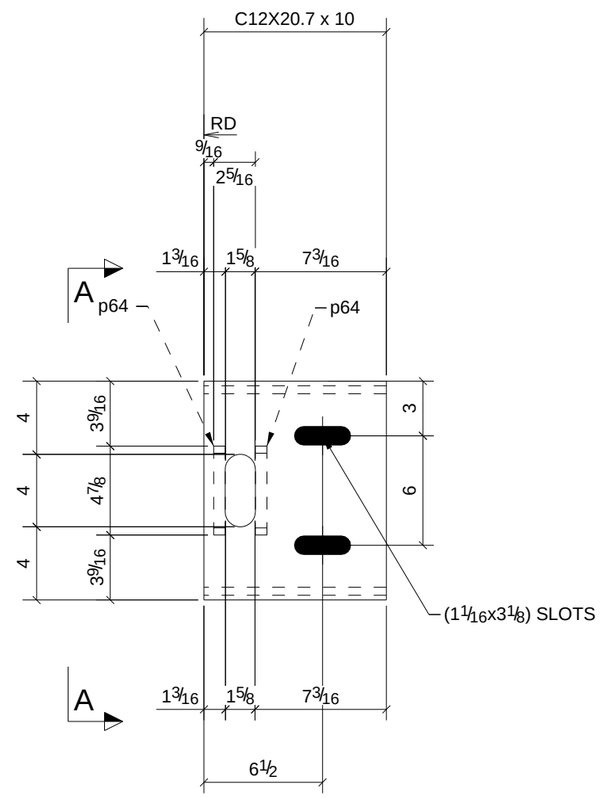

REV.	DESCRIPTION	DATE	DWN	CHK
A	For Approval & Field Survey	8/30/10	TMc	TAN
0	For Fabrication & F&F	9/15/10	TMc	TAN

4 - CHANNELS - 17M4

PHASE				
1	2	3	4	5
4	0	0	0	0

GENERAL NOTES

MATERIAL: A992 / A36
ELECTRODES: E70XX LH
REF. DRG.
HOLES: 13/16 DIA. U/N
CONN'S.: -
SURFACE PREP. AND PAINT: SSPC-SP-2 GREY PRIMER DEVOE NA-195 (U.N,)

JOB USE
SHOP
APPROVAL

DESCRIPTION: CHANNEL
PROJECT NAME: Hamilton High School Phase III
LOCATION: Hamilton City School District - Hamilton
CONTRACTOR: GC Contracting

BILL OF MATERIAL

SHIP	MARK	NO PCS	DESCRIPTION	LENGTH	PIECE MARK	REMARKS
4	17M4	4	C12X20.7	0'-10"		SQ-2 A36
		8	PL5/8"X1 11/16"	0'-4 7/8"	p64	A36

Avenue Fabricating Inc.
1281 Clough Pike
Batavia, OH 45103
(513) 752-1911

DRAWN BY	DATE	
TMc	08/24/2010	
CHKD. BY	DATE	
TAN		
JOB No.	DRG. No.	REV.
10-16	17M4	2

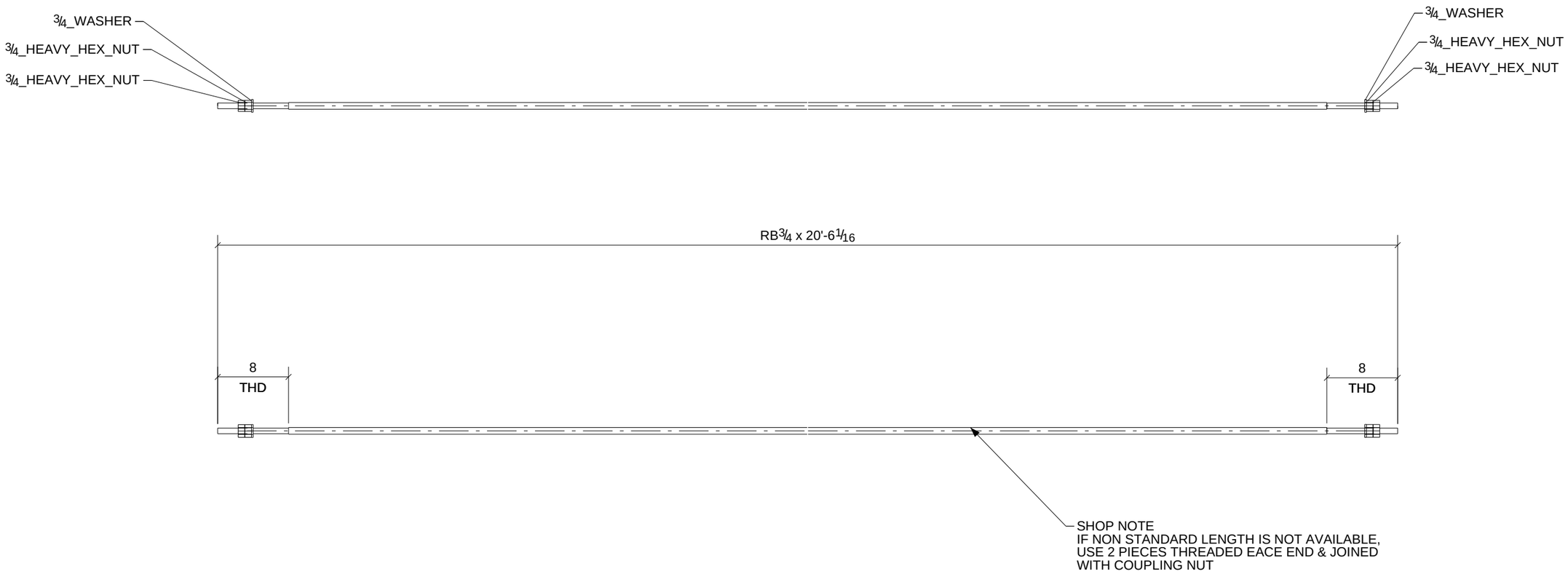

REV.	DESCRIPTION	DATE	DWN	CHK
A	For Approval & Field Survey	8/30/10	TMc	TAN
0	For Fabrication & F&F	9/15/10	TMc	TAN

2 - ROD BRACES - 17R1

PHASE				
1	2	3	4	5
2	0	0	0	0

GENERAL NOTES

MATERIAL: A992 / A36
ELECTRODES: E70XX LH
REF. DRG.
HOLES: 13/16 DIA. U/N
CONN'S.: -
SURFACE PREP. AND PAINT: SSPC-SP-2 GREY PRIMER DEVOE NA-195 (U.N,)

JOB USE
SHOP
APPROVAL

DESCRIPTION: BRACE
PROJECT NAME: Hamilton High School Phase III
LOCATION: Hamilton City School District - Hamilton
CONTRACTOR: GC Contracting

BILL OF MATERIAL

SHIP	MARK	NO PCS	DESCRIPTION	LENGTH	PIECE MARK	REMARKS
2	17R1	2	RB3/4"	20'-6 1/16"		SQ-2 A36
		8	3/4_HEAVY_HEX_NUT			
		4	3/4_WASHER			

Avenue Fabricating Inc.
1281 Clough Pike
Batavia, OH 45103
(513) 752-1911

DRAWN BY	DATE	
TMc	08/24/2010	
CHKD. BY	DATE	
TAN		
JOB No.	DRG. No.	REV.
10-16	17R1	2

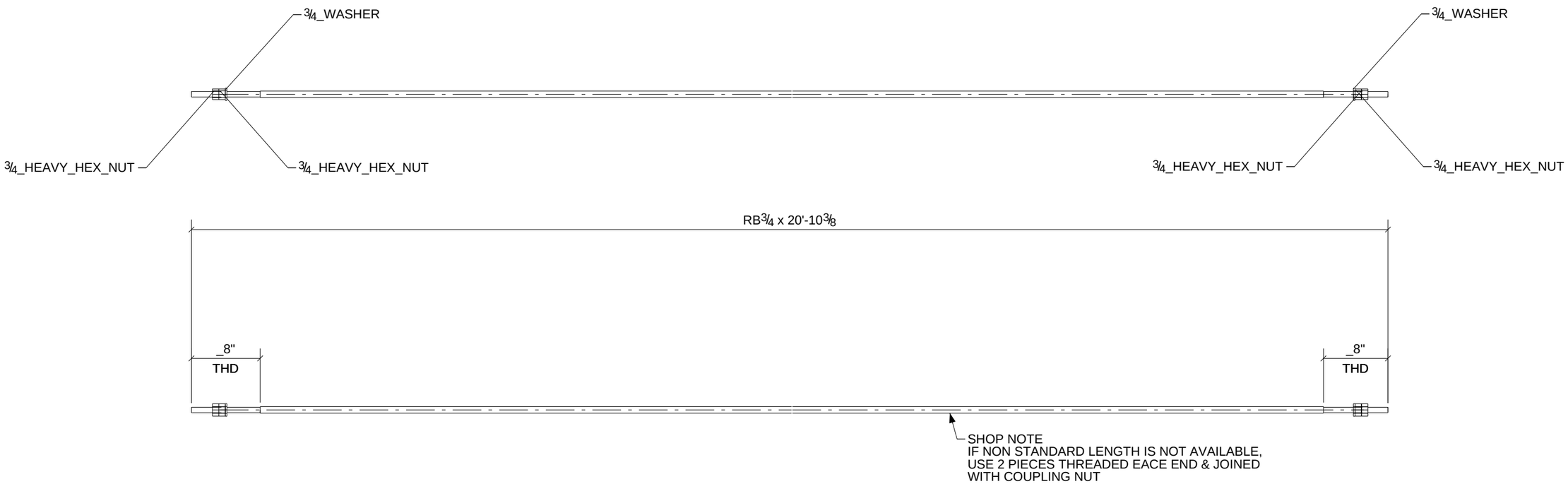

REV.	DESCRIPTION	DATE	DWN	CHK
A	For Approval & Field Survey	8/30/10	TMc	TAN
0	For Fabrication & F&F	9/15/10	TMc	TAN

2 - ROD BRACES - 17R2

PHASE				
1	2	3	4	5
2	0	0	0	0

GENERAL NOTES

MATERIAL: A992 / A36
ELECTRODES: E70XX LH
REF. DRG.
HOLES: 13/16 DIA. U/N
CONN'S.: -
SURFACE PREP. AND PAINT: SSPC-SP-2 GREY PRIMER DEVOE NA-195 (U.N,)

JOB USE
SHOP
APPROVAL

DESCRIPTION: BRACE
PROJECT NAME: Hamilton High School Phase III
LOCATION: Hamilton City School District - Hamilton
CONTRACTOR: GC Contracting

BILL OF MATERIAL

SHIP	MARK	NO PCS	DESCRIPTION	LENGTH	PIECE MARK	REMARKS
2	17R2	2	RB3/4"	20'-10 3/8"		SQ-2 A36
		8	3/4_HEAVY_HEX_NUT			
		4	3/4_WASHER			

Avenue Fabricating Inc.
1281 Clough Pike
Batavia, OH 45103
(513) 752-1911

DRAWN BY	DATE	
TMc	08/24/2010	
CHKD. BY	DATE	
TAN		
JOB No.	DRG. No.	REV.
10-16	17R2	2

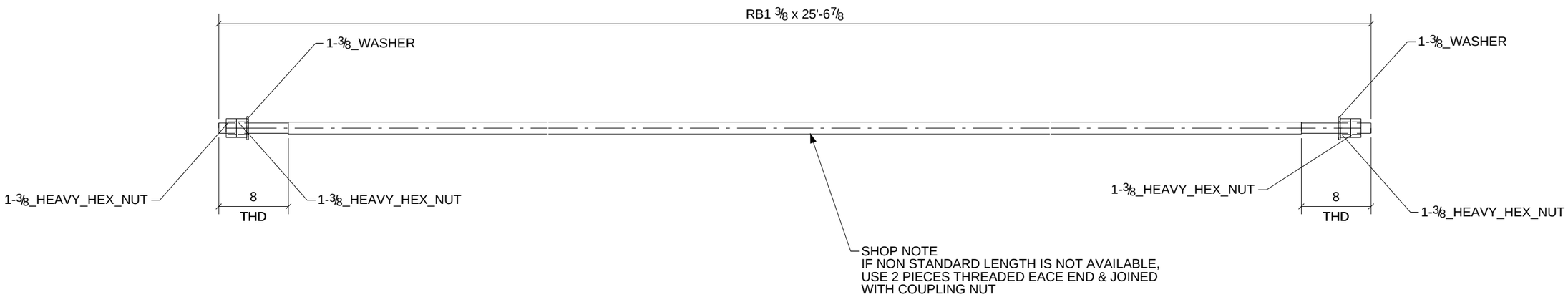

REV.	DESCRIPTION	DATE	DWN	CHK
A	For Approval & Field Survey	8/30/10	TMc	TAN
0	For Fabrication & F&F	9/15/10	TMc	TAN

2 - ROD BRACES - 17R3

PHASE				
1	2	3	4	5
2	0	0	0	0

GENERAL NOTES

MATERIAL: A992 / A36
ELECTRODES: E70XX LH
REF. DRG.
HOLES: 13/16 DIA. U/N
CONN'S.: -
SURFACE PREP. AND PAINT: SSPC-SP-2 GREY PRIMER DEVOE NA-195 (U.N,)

JOB USE
SHOP
APPROVAL

DESCRIPTION: BRACE
PROJECT NAME: Hamilton High School Phase III
LOCATION: Hamilton City School District - Hamilton
CONTRACTOR: GC Contracting

BILL OF MATERIAL

SHIP	MARK	NO PCS	DESCRIPTION	LENGTH	PIECE MARK	REMARKS
2	17R3	2	RB1 3/8"	25'-6 7/8"		SQ-2 A36
		4	1-3/8_WASHER			
		8	1-3/8_HEAVY_HEX_NUT			

Avenue Fabricating Inc.
1281 Clough Pike
Batavia, OH 45103
(513) 752-1911

DRAWN BY	DATE	
TMc	08/24/2010	
CHKD. BY	DATE	
TAN		
JOB No.	DRG. No.	REV.
10-16	17R3	2

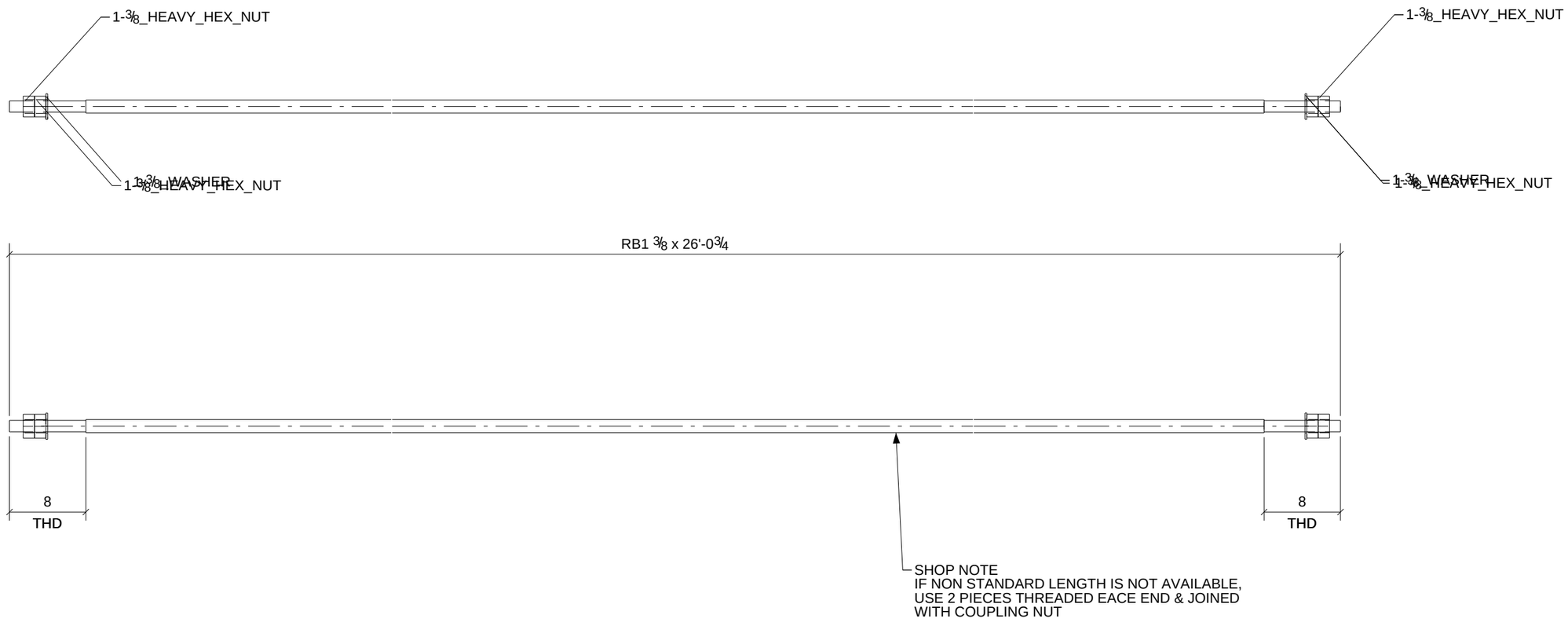

REV.	DESCRIPTION	DATE	DWN	CHK
A	For Approval & Field Survey	8/30/10	TMc	TAN
0	For Fabrication & F&F	9/15/10	TMc	TAN

2 - ROD BRACES - 17R4

PHASE				
1	2	3	4	5
2	0	0	0	0

GENERAL NOTES

MATERIAL: A992 / A36
ELECTRODES: E70XX LH
REF. DRG.
HOLES: 13/16 DIA. U/N
CONN'S.: -
SURFACE PREP. AND PAINT: SSPC-SP-2 GREY PRIMER DEVOE NA-195 (U.N,)

JOB USE
SHOP
APPROVAL

DESCRIPTION: BRACE
PROJECT NAME: Hamilton High School Phase III
LOCATION: Hamilton City School District - Hamilton
CONTRACTOR: GC Contracting

BILL OF MATERIAL

SHIP	MARK	NO PCS	DESCRIPTION	LENGTH	PIECE MARK	REMARKS
2	17R4	2	RB1 3/8"	26'-0 3/4"		SQ-2 A36
		4	1-3/8_WASHER			
		8	1-3/8_HEAVY_HEX_NUT			

Avenue Fabricating Inc.
1281 Clough Pike
Batavia, OH 45103
(513) 752-1911

DRAWN BY	DATE	
TMc	08/24/2010	
CHKD. BY	DATE	
TAN		
JOB No.	DRG. No.	REV.
10-16	17R4	2

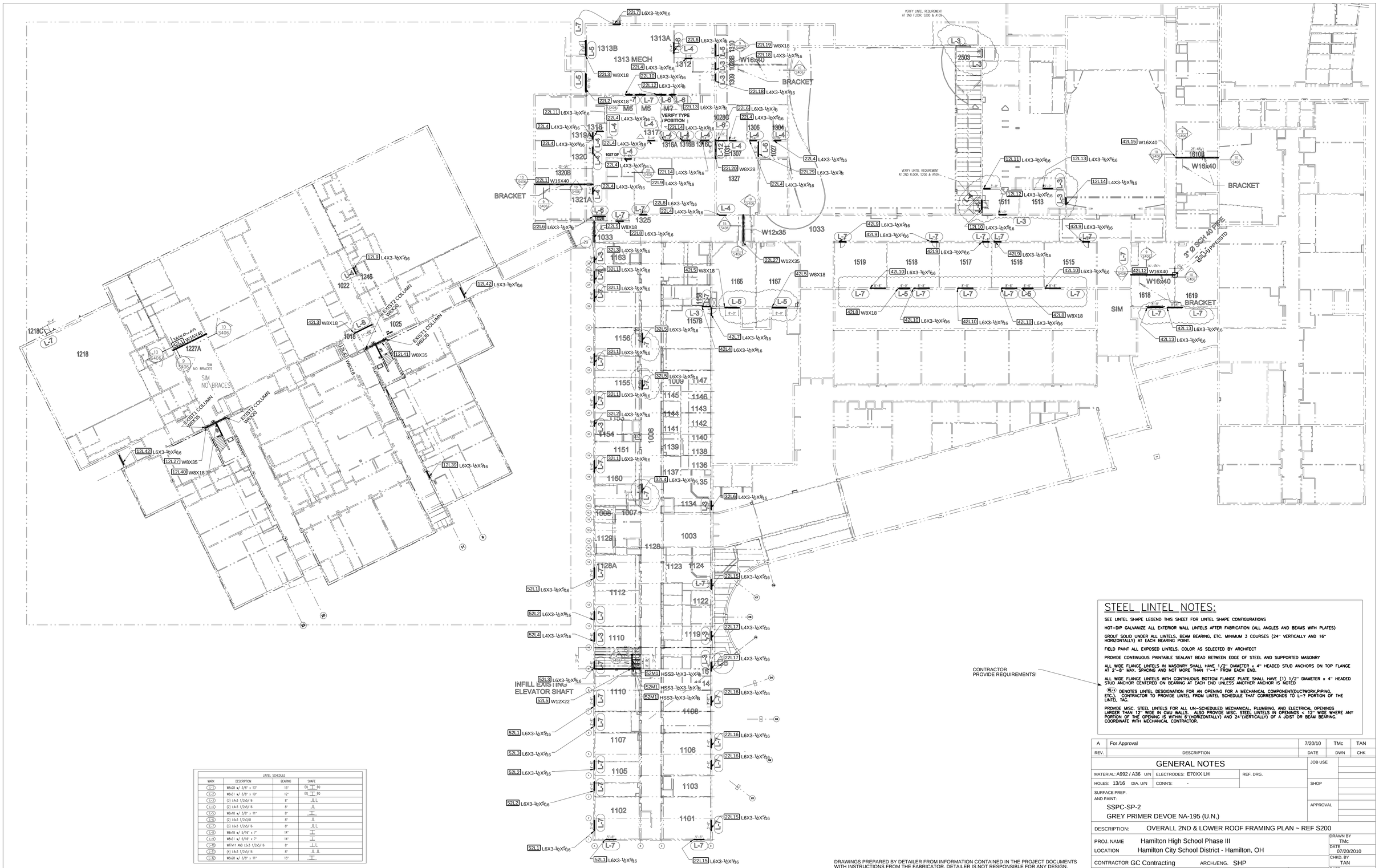

OVERALL 2ND & LOWER ROOF FRAMING PLAN ~ REF S200

LINTEL SCHEDULE			
MARK	DESCRIPTION	BEARING	SHAPE
L-1	W8x28 w/ 3/8" x 13"	15"	EQ EQ
L-2	W8x31 w/ 3/8" x 19"	12"	EQ EQ
L-3	(3) L4x3 1/2x5/16	8"	JL L L
L-4	(2) L4x3 1/2x5/16	8"	JL L
L-5	W8x18 w/ 3/8" x 11"	8"	
L-6	(2) L6x3 1/2x3/8	8"	JL L
L-7	(3) L6x3 1/2x5/16	8"	JL L L
L-8	W8x18 w/ 5/16" x 7"	14"	
L-9	W8x31 w/ 5/16" x 7"	14"	
L-10	WT7x11 AND L5x3 1/2x5/16	8"	L L L
L-11	(4) L4x3 1/2x5/16	8"	JL JL L
L-12	W8x28 w/ 3/8" x 11"	15"	

STEEL LINTEL NOTES:

SEE LINTEL SHAPE LEGEND THIS SHEET FOR LINTEL SHAPE CONFIGURATIONS

HOT-DIP GALVANIZE ALL EXTERIOR WALL LINTELS AFTER FABRICATION (ALL ANGLES AND BEAMS WITH PLATES)

GROUT SOLID UNDER ALL LINTELS. BEAM BEARING, ETC. MINIMUM 3 COURSES (24" VERTICALLY AND 16" HORIZONTALLY) AT EACH BEARING POINT.

FIELD PAINT ALL EXPOSED LINTELS. COLOR AS SELECTED BY ARCHITECT

PROVIDE CONTINUOUS PAINTABLE SEALANT BEAD BETWEEN EDGE OF STEEL AND SUPPORTED MASONRY

ALL WIDE FLANGE LINTELS IN MASONRY SHALL HAVE 1/2" DIAMETER x 4" HEADED STUD ANCHORS ON TOP FLANGE AT 2'-8" MAX. SPACING AND NOT MORE THAN 1'-4" FROM EACH END.

ALL WIDE FLANGE LINTELS WITH CONTINUOUS BOTTOM FLANGE PLATE SHALL HAVE (1) 1/2" DIAMETER x 4" HEADED STUD ANCHOR CENTERED ON BEARING AT EACH END UNLESS ANOTHER ANCHOR IS NOTED

(R-1) DENOTES LINTEL DESIGNATION FOR AN OPENING FOR A MECHANICAL COMPONENT(DUCTWORK,PIPING, ETC.). CONTRACTOR TO PROVIDE LINTEL FROM LINTEL SCHEDULE THAT CORRESPONDS TO L-? PORTION OF THE LINTEL TAG.

PROVIDE MISC. STEEL LINTELS FOR ALL UN-SCHEDULED MECHANICAL, PLUMBING, AND ELECTRICAL OPENINGS LARGER THAN 12" WIDE IN CMU WALLS. ALSO PROVIDE MISC. STEEL LINTELS IN OPENINGS < 12" WIDE WHERE ANY PORTION OF THE OPENING IS WITHIN 6"(HORIZONTALLY) AND 24"(VERTICALLY) OF A JOIST OR BEAM BEARING. COORDINATE WITH MECHANICAL CONTRACTOR.

CONTRACTOR PROVIDE REQUIREMENTS!

REV.	DESCRIPTION	DATE	DWN	CHK
A	For Approval	7/20/10	TMc	TAN

GENERAL NOTES

MATERIAL: A992 / A36 U/N ELECTRODES: E70XX LH REF. DRG.

HOLES: 13/16 DIA. U/N CONN'S: -

SURFACE PREP. AND PAINT:
SSPC-SP-2
GREY PRIMER DEVOE NA-195 (U.N,)

JOB USE
SHOP
APPROVAL

DESCRIPTION: OVERALL 2ND & LOWER ROOF FRAMING PLAN ~ REF S200

PROJ. NAME Hamilton High School Phase III
LOCATION Hamilton City School District - Hamilton, OH

DRAWN BY TMc
DATE 07/20/2010
CHKD. BY TAN
DATE
JOB No. 10-16
DRG. No. E200
REV. A

CONTRACTOR GC Contracting ARCH./ENG. SHP

Avenue Fabricating Inc.
1281 Clough Pike
Batavia, OH 45103
(513) 752-1911

DRAWINGS PREPARED BY DETAILER FROM INFORMATION CONTAINED IN THE PROJECT DOCUMENTS WITH INSTRUCTIONS FROM THE FABRICATOR. DETAILER IS NOT RESPONSIBLE FOR ANY DESIGN, ENGINEERING OR CODE ISSUES WHICH MAY ARISE FROM THE USE OF THESE DRAWINGS. APPROVALS SHOULD BE OBTAINED FROM THE OWNER, ARCHITECT, ENGINEER, CONTRACTOR, WHICH EVER IS APPLICABLE. THE FABRICATOR SHOULD CHECK THE DETAIL DOCUMENTS FOR CORRECTNESS BEFORE RELEASING FOR FABRICATION. THE USE OF THE DETAILED DRAWINGS FOR FABRICATION CONSTITUTES ACCEPTANCE AND APPROVAL OF THE DRAWINGS, MATERIAL LIST OR CUT LIST, WHICH EVER APPLIES.

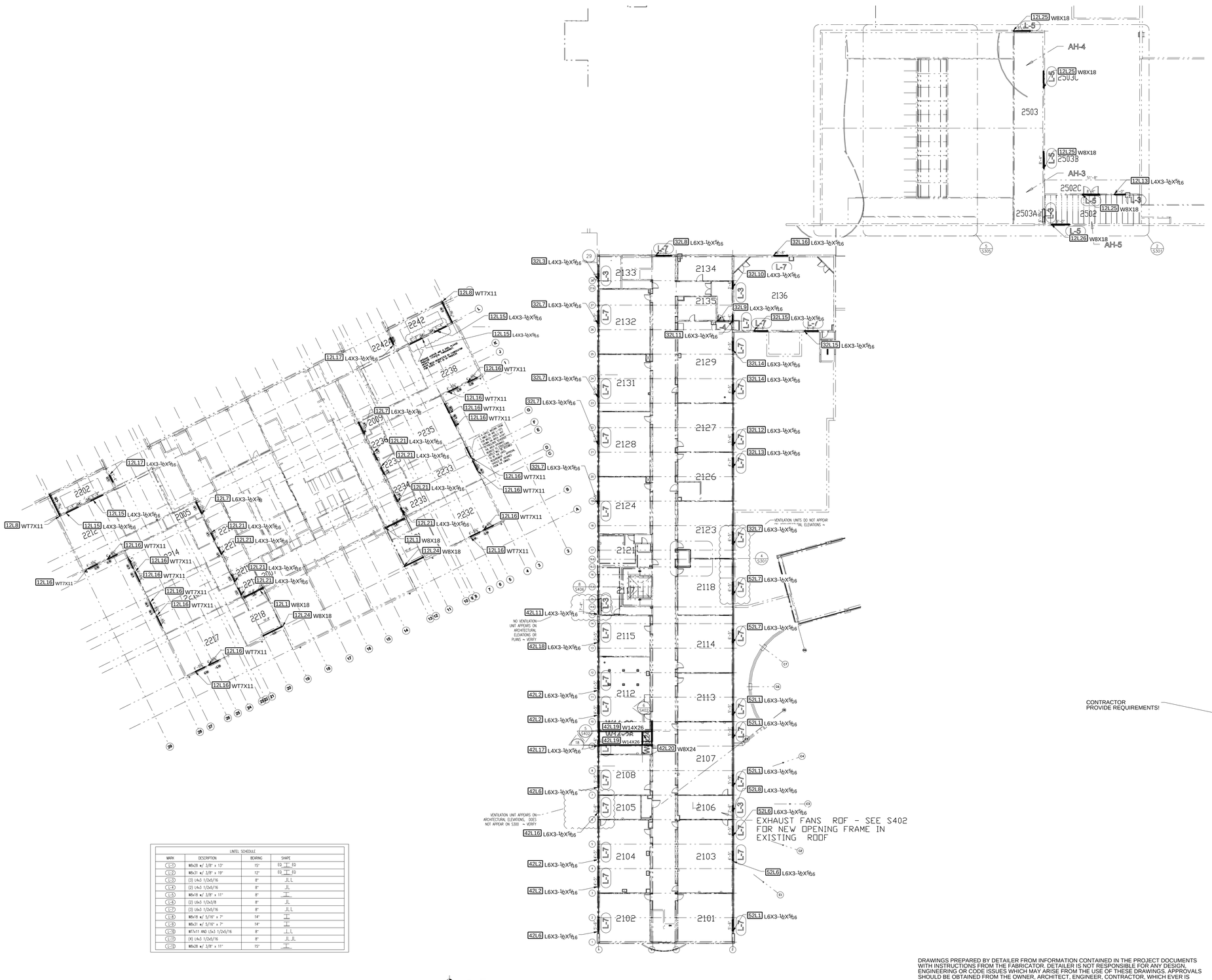

OVERALL UPPER LEVEL & ROOF FRAMING PLAN ~ REF S300

LINTEL SCHEDULE			
MARK	DESCRIPTION	BEARING	SHAPE
L-1	W8x28 w/ 3/8" x 13"	15"	EQ EQ
L-2	W8x31 w/ 3/8" x 19"	12"	EQ EQ
L-3	(3) L4x3 1/2x5/16	8"	
L-4	(2) L4x3 1/2x5/16	8"	
L-5	W8x18 w/ 3/8" x 11"	8"	
L-6	(2) L6x3 1/2x3/8	8"	
L-7	(3) L6x3 1/2x5/16	8"	
L-8	W8x18 w/ 5/16" x 7"	14"	
L-9	W8x31 w/ 5/16" x 7"	14"	
L-10	W17x11 AND (5x3 1/2x5/16	8"	
L-11	(4) L4x3 1/2x5/16	8"	
L-12	W8x28 w/ 3/8" x 11"	15"	

STEEL LINTEL NOTES:

SEE LINTEL SHAPE LEGEND THIS SHEET FOR LINTEL SHAPE CONFIGURATIONS

HOT-DIP GALVANIZE ALL EXTERIOR WALL LINTELS AFTER FABRICATION (ALL ANGLES AND BEAMS WITH PLATES)

GROUT SOLID UNDER ALL LINTELS. BEAM BEARING, ETC. MINIMUM 3 COURSES (24" VERTICALLY AND 16" HORIZONTALLY) AT EACH BEARING POINT.

FIELD PAINT ALL EXPOSED LINTELS. COLOR AS SELECTED BY ARCHITECT

PROVIDE CONTINUOUS PAINTABLE SEALANT BEAD BETWEEN EDGE OF STEEL AND SUPPORTED MASONRY

ALL WIDE FLANGE LINTELS IN MASONRY SHALL HAVE 1/2" DIAMETER x 4" HEADED STUD ANCHORS ON TOP FLANGE AT 2'-8" MAX. SPACING AND NOT MORE THAN 1'-4" FROM EACH END.

ALL WIDE FLANGE LINTELS WITH CONTINUOUS BOTTOM FLANGE PLATE SHALL HAVE (1) 1/2" DIAMETER x 4" HEADED STUD ANCHOR CENTERED ON BEARING AT EACH END UNLESS ANOTHER ANCHOR IS NOTED

(M-1) DENOTES LINTEL DESCIGNATION FOR AN OPENING FOR A MECHANICAL COMPONENT(DUCTWORK,PIPING, ETC.). CONTRACTOR TO PROVIDE LINTEL FROM LINTEL SCHEDULE THAT CORRESPONDS TO L-? PORTION OF THE LINTEL TAG.

PROVIDE MISC. STEEL LINTELS FOR ALL UN-SCHEDULED MECHANICAL, PLUMBING, AND ELECTRICAL OPENINGS LARGER THAN 12" WIDE IN CMU WALLS. ALSO PROVIDE MISC. STEEL LINTELS IN OPENINGS < 12" WIDE WHERE ANY PORTION OF THE OPENING IS WITHIN 6"(HORIZONTALLY) AND 24"(VERTICALLY) OF A JOIST OR BEAM BEARING. COORDINATE WITH MECHANICAL CONTRACTOR.

CONTRACTOR PROVIDE REQUIREMENTS!

DRAWINGS PREPARED BY DETAILER FROM INFORMATION CONTAINED IN THE PROJECT DOCUMENTS WITH INSTRUCTIONS FROM THE FABRICATOR. DETAILER IS NOT RESPONSIBLE FOR ANY DESIGN, ENGINEERING OR CODE ISSUES WHICH MAY ARISE FROM THE USE OF THESE DRAWINGS. APPROVALS SHOULD BE OBTAINED FROM THE OWNER, ARCHITECT, ENGINEER, CONTRACTOR, WHICH EVER IS APPLICABLE. THE FABRICATOR SHOULD CHECK THE DETAIL DOCUMENTS FOR CORRECTNESS BEFORE RELEASING FOR FABRICATION. THE USE OF THE DETAILED DRAWINGS FOR FABRICATION CONSTITUTES ACCEPTANCE AND APPROVAL OF THE DRAWINGS, MATERIAL LIST OR CUT LIST, WHICH EVER APPLIES.

REV.	DESCRIPTION	DATE	DWN	CHK
A	For Approval	7/23/10	TMc	TAN

GENERAL NOTES

MATERIAL: A992 / A36 U/N ELECTRODES: E70XX LH REF. DRG.

HOLES: 13/16 DIA. U/N CONN'S: -

SURFACE PREP. AND PAINT:

SSPC-SP-2

GREY PRIMER DEVOE NA-195 (U.N.)

JOB USE

SHOP

APPROVAL

DESCRIPTION: OVERALL UPPER LEVEL & ROOF FRAMING PLAN ~ REF S300

PROJ. NAME Hamilton High School Phase III

LOCATION Hamilton City School District - Hamilton, OH

CONTRACTOR GC Contracting ARCH./ENG. SHP

DRAWN BY TMc

DATE 07/23/2010

CHKD. BY TAN

DATE

JOB No. 10-16

DRG. No. E300 REV. A

Avenue Fabricating Inc.
1281 Clough Pike
Batavia, OH 45103
(513) 752-1911

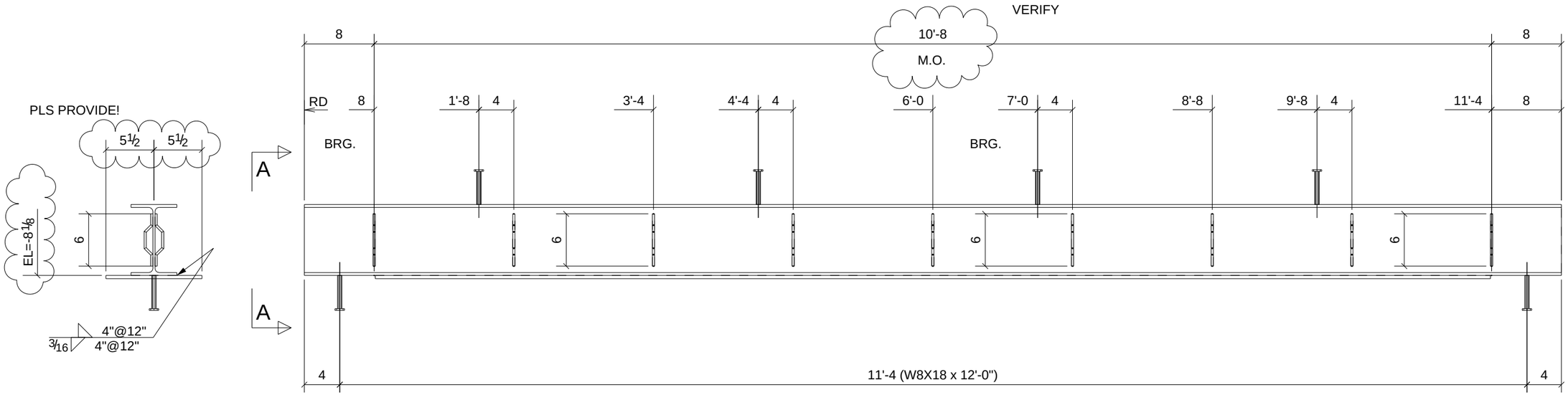

A - A

L-5 (M.O.=10'-8") LOCATION (2007)

ARCH./ENG/OWNER
PLEASE VERIFY / PROVIDE
TYPE & LOCATIONS
ERECTOR / GC ~ PLEASE
VERIFY / PROVIDE
M.O. @ EACH LOCATION

2 - LINTELS - 12L1

PHASE				
1	2	3	4	5
2	0	0	0	0

W	8 1/8"x1/4"
F	5 1/4"x5/16"

REV.	DESCRIPTION	DATE	DWN	CHK
A	For Approval	7/23/10	TMc	TAN

GENERAL NOTES

MATERIAL: A992 / A36
ELECTRODES: E70XX LH
REF. DRG.
HOLES: 13/16 DIA. U/N
CONN'S.: -
SURFACE PREP. AND PAINT: SSPC-SP-2 GREY PRIMER DEVOE NA-195 (U.N,)

JOB USE
SHOP
APPROVAL

DESCRIPTION: LINTEL
PROJECT NAME: Hamilton High School Phase III
LOCATION: Hamilton City School District - Hamilton
CONTRACTOR: GC Contracting

BILL OF MATERIAL

SHIP	MARK	NO PCS	DESCRIPTION	LENGTH	PIECE MARK	REMARKS
2	12L1	2	W8X18	12'-0"		SQ-2 A992 1 S/C STD PRIMER
		2	BAR3/8"X11"	10'-7 3/4"	p1	A36 1 S/C STD PRIMER
		36	H&B #359	0'-6 3/16"	x6	A36 GALVANIZED
		12	STUD 1/2" DIA	0'-4"		

Avenue Fabricating Inc.
1281 Clough Pike
Batavia, OH 45103
(513) 752-1911

DRAWN BY	TMc
DATE	07/26/2010
CHKD. BY	TAN
DATE	
JOB No.	10-16
DRG. No.	12L1
REV.	1

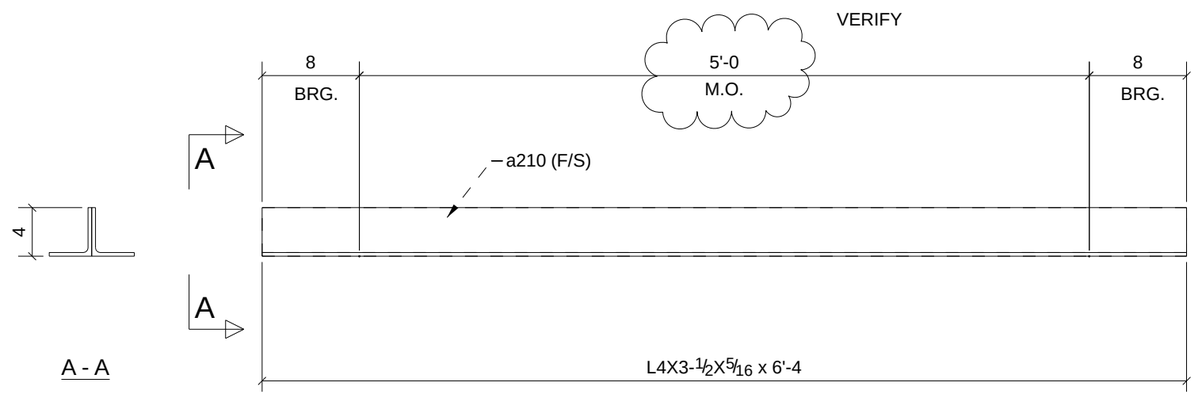

L-4 LOCATION (1511)

ARCH./ENG/OWNER
PLEASE VERIFY / PROVIDE
TYPE & LOCATIONS
ERECTOR / GC ~ PLEASE
VERIFY / PROVIDE
M.O. @ EACH LOCATION

REV.	DESCRIPTION	DATE	DWN	CHK
A	For Approval	7/20/10	TMc	TAN

PHASE				
1	2	3	4	5
0	1	0	0	0

ONE - LINTEL - 12L10

(2 ANGLES EACH LINTEL)

GENERAL NOTES

MATERIAL: A992 / A36
ELECTRODES: E70XX LH
REF. DRG.
HOLES: 13/16 DIA. U/N
CONN'S.: -
SURFACE PREP. AND PAINT: SSPC-SP-2 GREY PRIMER DEVOE NA-195 (U.N,)

JOB USE
SHOP
APPROVAL

DESCRIPTION: LINTEL
PROJECT NAME: Hamilton High School Phase III
LOCATION: Hamilton City School District - Hamilton
CONTRACTOR: GC Contracting

BILL OF MATERIAL

SHIP	MARK	NO PCS	DESCRIPTION	LENGTH	PIECE MARK	REMARKS
1	12L10	1	L4X3-1/2X5/16	6'-4"		SQ-2 A36 1 S/C STD PRIMER
		1	L4X3-1/2X5/16	6'-4"	a210	A36 1 S/C STD PRIMER

Avenue Fabricating Inc.
1281 Clough Pike
Batavia, OH 45103
(513) 752-1911

DRAWN BY TMc	DATE 07/20/2010		
CHKD. BY TAN	DATE		
JOB No. 10-16	DRG. No. 12L10	REV. 1	

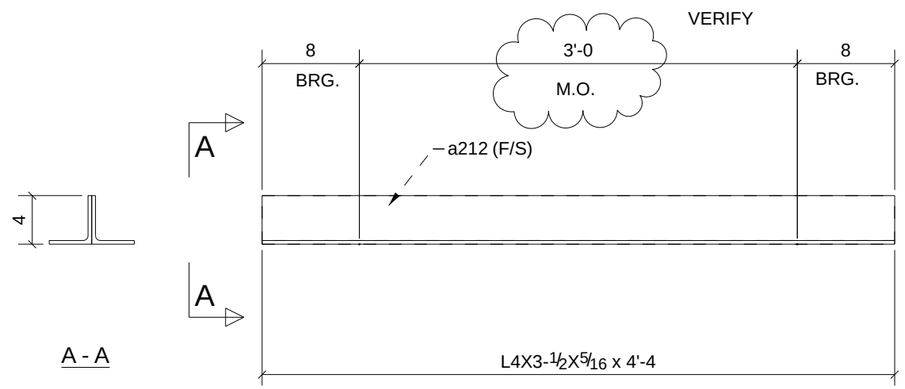

L-4 LOCATION (1511)

ARCH./ENG/OWNER
PLEASE VERIFY / PROVIDE
TYPE & LOCATIONS
ERECTOR / GC ~ PLEASE
VERIFY / PROVIDE
M.O. @ EACH LOCATION

REV.	DESCRIPTION	DATE	DWN	CHK
A	For Approval	7/20/10	TMc	TAN

ONE - LINTEL - 12L11

(2 ANGLES EACH LINTEL)

PHASE				
1	2	3	4	5
0	1	0	0	0

GENERAL NOTES

MATERIAL: A992 / A36
ELECTRODES: E70XX LH
REF. DRG.
HOLES: 13/16 DIA. U/N
CONN'S.: -
SURFACE PREP. AND PAINT: SSPC-SP-2 GREY PRIMER DEVOE NA-195 (U.N,)

JOB USE
SHOP
APPROVAL

DESCRIPTION: LINTEL
PROJECT NAME: Hamilton High School Phase III
LOCATION: Hamilton City School District - Hamilton
CONTRACTOR: GC Contracting

BILL OF MATERIAL

SHIP	MARK	NO PCS	DESCRIPTION	LENGTH	PIECE MARK	REMARKS
1	12L11	1	L4X3-1/2X5/16	4'-4"		SQ-2 A36 1 S/C STD PRIMER
		1	L4X3-1/2X5/16	4'-4"	a212	A36 1 S/C STD PRIMER

Avenue Fabricating Inc.
1281 Clough Pike
Batavia, OH 45103
(513) 752-1911

DRAWN BY	DATE	
TMc	07/20/2010	
CHKD. BY	DATE	
TAN		
JOB No.	DRG. No.	REV.
10-16	12L11	1

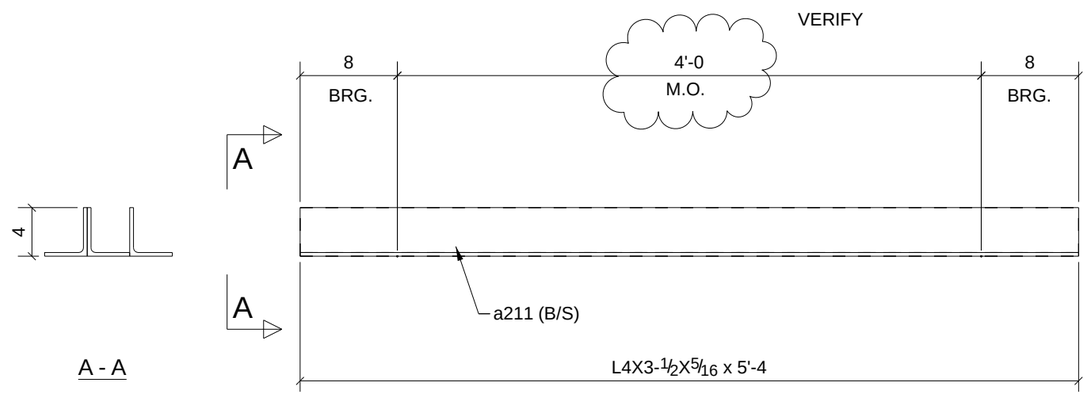

L-3 (M.O.=5'-0") LOCATION (1511)

ARCH./ENG/OWNER
PLEASE VERIFY / PROVIDE
TYPE & LOCATIONS
ERECTOR / GC ~ PLEASE
VERIFY / PROVIDE
M.O. @ EACH LOCATION

REV.	DESCRIPTION	DATE	DWN	CHK
A	For Approval	7/20/10	TMc	TAN

ONE - LINTEL - 12L12

(3 ANGLES EACH LINTEL)

PHASE				
1	2	3	4	5
0	0	1	0	0

GENERAL NOTES

MATERIAL: A992 / A36
ELECTRODES: E70XX LH
REF. DRG.
HOLES: 13/16 DIA. U/N
CONN'S.: -
SURFACE PREP. AND PAINT: SSPC-SP-2
GREY PRIMER DEVOE NA-195 (U.N,)

JOB USE
SHOP
APPROVAL

DESCRIPTION: LINTEL
PROJECT NAME: Hamilton High School Phase III
LOCATION: Hamilton City School District - Hamilton
CONTRACTOR: GC Contracting

BILL OF MATERIAL

SHIP	MARK	NO PCS	DESCRIPTION	LENGTH	PIECE MARK	REMARKS
1	12L12	1	L4X3-1/2X5/16	5'-4"		SQ-2 A36 1 S/C STD PRIMER
		2	L4X3-1/2X5/16	5'-4"	a211	A36 1 S/C STD PRIMER

Avenue Fabricating Inc.
1281 Clough Pike
Batavia, OH 45103
(513) 752-1911

DRAWN BY	DATE	
TMc	07/20/2010	
CHKD. BY	DATE	
TAN		
JOB No.	DRG. No.	REV.
10-16	12L12	1

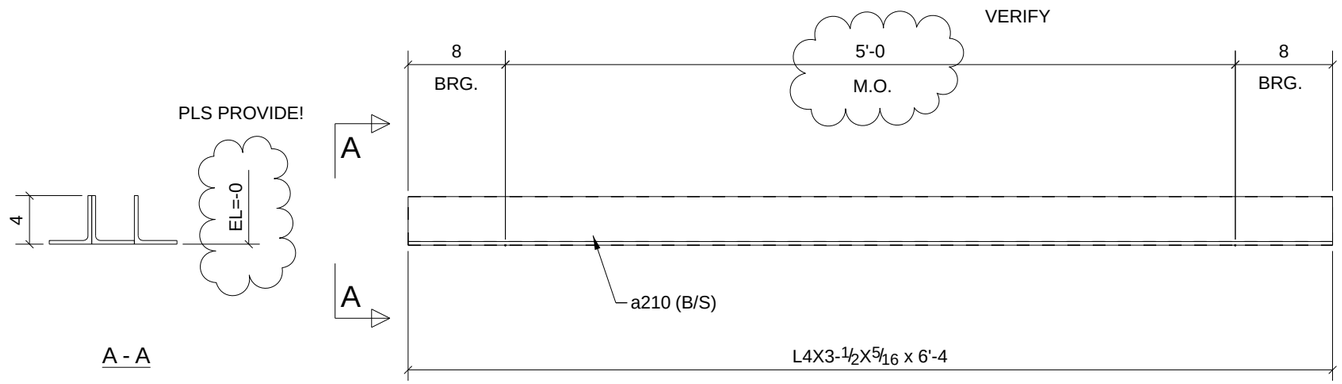

L-3 (M.O.=5'-0") LOCATION (1513)

ARCH./ENG/OWNER
PLEASE VERIFY / PROVIDE
TYPE & LOCATIONS
ERECTOR / GC ~ PLEASE
VERIFY / PROVIDE
M.O. @ EACH LOCATION

REV.	DESCRIPTION	DATE	DWN	CHK
A	For Approval	7/20/10	TMc	TAN

PHASE				
1	2	3	4	5
1	0	1	0	0

2 - LINTELS - 12L13

(3 ANGLES EACH LINTEL)

GENERAL NOTES

MATERIAL: A992 / A36
ELECTRODES: E70XX LH
REF. DRG.
HOLES: 13/16 DIA. U/N
CONN'S.: -
SURFACE PREP. AND PAINT: SSPC-SP-2
GREY PRIMER DEVOE NA-195 (U.N,)

JOB USE
SHOP
APPROVAL

DESCRIPTION: LINTEL
PROJECT NAME: Hamilton High School Phase III
LOCATION: Hamilton City School District - Hamilton
CONTRACTOR: GC Contracting

BILL OF MATERIAL

SHIP	MARK	NO PCS	DESCRIPTION	LENGTH	PIECE MARK	REMARKS
2	12L13	2	L4X3-1/2X5/16	6'-4"		SQ-2 A36 1 S/C STD PRIMER
		4	L4X3-1/2X5/16	6'-4"	a210	A36 1 S/C STD PRIMER

Avenue Fabricating Inc.
1281 Clough Pike
Batavia, OH 45103
(513) 752-1911

DRAWN BY	DATE	
TMc	07/20/2010	
CHKD. BY	DATE	
TAN		
JOB No.	DRG. No.	REV.
10-16	12L13	1

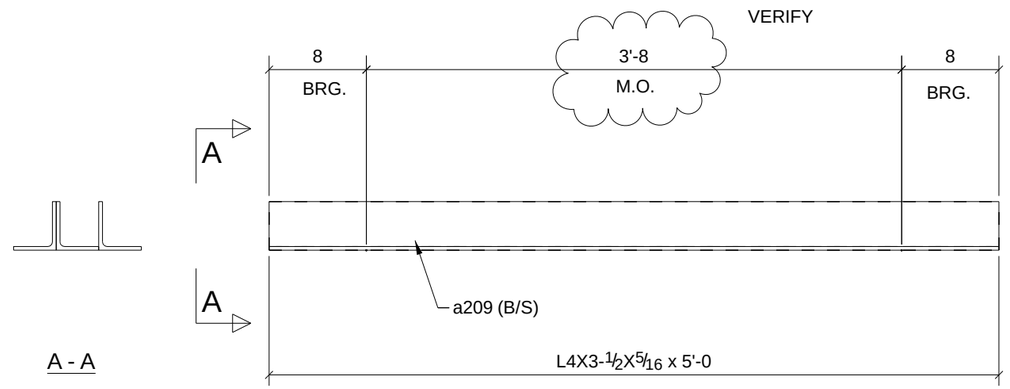

L-3 (M.O.=3'-8") LOCATION (1513)

ARCH./ENG/OWNER
PLEASE VERIFY / PROVIDE
TYPE & LOCATIONS
ERECTOR / GC ~ PLEASE
VERIFY / PROVIDE
M.O. @ EACH LOCATION

REV.	DESCRIPTION	DATE	DWN	CHK
A	For Approval	7/20/10	TMc	TAN

ONE - LINTEL - 12L14

(3 ANGLES EACH LINTEL)

PHASE				
1	2	3	4	5
0	0	1	0	0

GENERAL NOTES

MATERIAL: A992 / A36
ELECTRODES: E70XX LH
REF. DRG.
HOLES: 13/16 DIA. U/N
CONN'S.: -
SURFACE PREP. AND PAINT: SSPC-SP-2
GREY PRIMER DEVOE NA-195 (U.N,)

JOB USE
SHOP
APPROVAL

DESCRIPTION: LINTEL
PROJECT NAME: Hamilton High School Phase III
LOCATION: Hamilton City School District - Hamilton
CONTRACTOR: GC Contracting

BILL OF MATERIAL

SHIP	MARK	NO PCS	DESCRIPTION	LENGTH	PIECE MARK	REMARKS
1	12L14	1	L4X3-1/2X5/16	5'-0"		SQ-2 A36 1 S/C STD PRIMER
		2	L4X3-1/2X5/16	5'-0"	a209	A36 1 S/C STD PRIMER

Avenue Fabricating Inc.
1281 Clough Pike
Batavia, OH 45103
(513) 752-1911

DRAWN BY	DATE	
TMc	07/20/2010	
CHKD. BY	DATE	
TAN		
JOB No.	DRG. No.	REV.
10-16	12L14	1

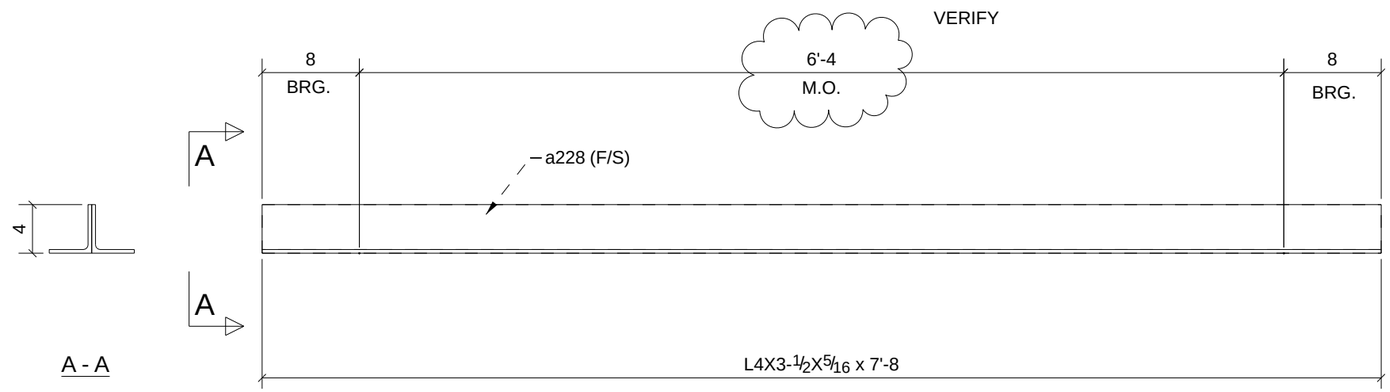

L-4 (M.O.=6'-4") LOCATION (2242)

(2202)

ARCH./ENG/OWNER
PLEASE VERIFY / PROVIDE
TYPE & LOCATIONS
ERECTOR / GC ~ PLEASE
VERIFY / PROVIDE
M.O. @ EACH LOCATION

REV.	DESCRIPTION	DATE	DWN	CHK
A	For Approval	7/23/10	TMc	TAN

4 - LINTELS - 12L15

(2 ANGLES EACH LINTEL)

PHASE				
1	2	3	4	5
4	0	0	0	0

GENERAL NOTES

MATERIAL: A992 / A36
ELECTRODES: E70XX LH
REF. DRG.
HOLES: 13/16 DIA. U/N
CONN'S.: -
SURFACE PREP. AND PAINT: SSPC-SP-2
GREY PRIMER DEVOE NA-195 (U.N,)

JOB USE
SHOP
APPROVAL

DESCRIPTION: LINTEL
PROJECT NAME: Hamilton High School Phase III
LOCATION: Hamilton City School District - Hamilton
CONTRACTOR: GC Contracting

BILL OF MATERIAL

SHIP	MARK	NO PCS	DESCRIPTION	LENGTH	PIECE MARK	REMARKS
4	12L15	4	L4X3-1/2X5/16	7'-8"		SQ-2 A36 1 S/C STD PRIMER
		4	L4X3-1/2X5/16	7'-8"	a228	A36 1 S/C STD PRIMER

Avenue Fabricating Inc.
1281 Clough Pike
Batavia, OH 45103
(513) 752-1911

DRAWN BY	DATE	
TMc	07/23/2010	
CHKD. BY	DATE	
TAN		
JOB No.	DRG. No.	REV.
10-16	12L15	1

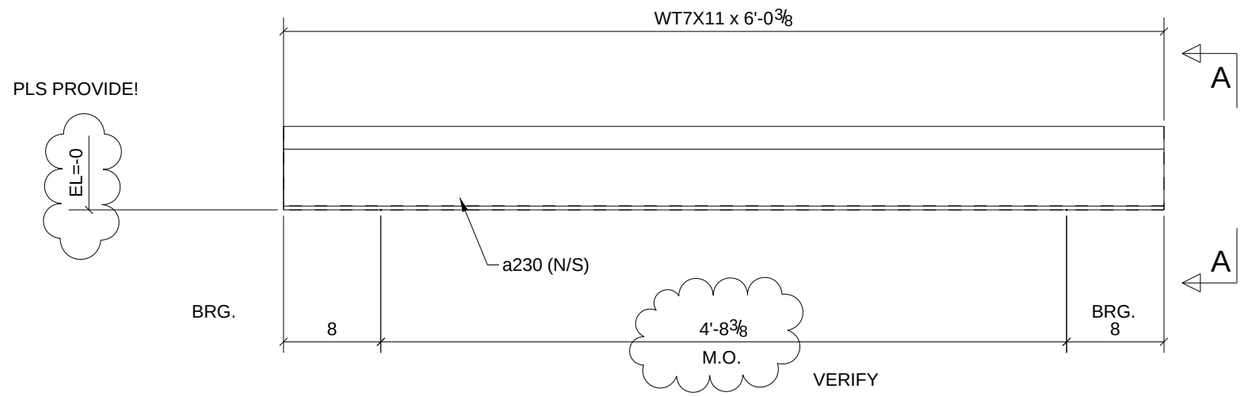

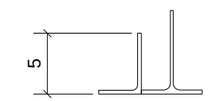

A - A

L-10 (M.O.=4'-8-3/8") LOCATION (2212) (2214) (2216) (2217) (2232) (2233) (2235) (2238)

ARCH./ENG/OWNER
PLEASE VERIFY / PROVIDE
TYPE & LOCATIONS
ERECTOR / GC ~ PLEASE
VERIFY / PROVIDE
M.O. @ EACH LOCATION

REV.	DESCRIPTION	DATE	DWN	CHK
A	For Approval	7/23/10	TMc	TAN

PHASE				
1	2	3	4	5
16	0	0	0	0

16 - LINTELS - 12L16

(1 ANGLE/1 TEE EACH LINTEL)

GENERAL NOTES

MATERIAL: A992 / A36
ELECTRODES: E70XX LH
REF. DRG.
HOLES: 13/16 DIA. U/N
CONN'S.: -
SURFACE PREP. AND PAINT: SSPC-SP-2 GREY PRIMER DEVOE NA-195 (U.N,)

JOB USE
SHOP
APPROVAL

DESCRIPTION: LINTEL
PROJECT NAME: Hamilton High School Phase III
LOCATION: Hamilton City School District - Hamilton
CONTRACTOR: GC Contracting

BILL OF MATERIAL

SHIP	MARK	NO PCS	DESCRIPTION	LENGTH	PIECE MARK	REMARKS
16	12L16	16	WT7X11	6'-0 3/8"		SQ-2 A36 GALVANIZED
		16	L5X3-1/2X5/16	6'-0 3/8"	a230	A36 GALVANIZED

Avenue Fabricating Inc.
1281 Clough Pike
Batavia, OH 45103
(513) 752-1911

DRAWN BY	DATE	
TMc	07/23/2010	
CHKD. BY	DATE	
TAN		
JOB No.	DRG. No.	REV.
10-16	12L16	1

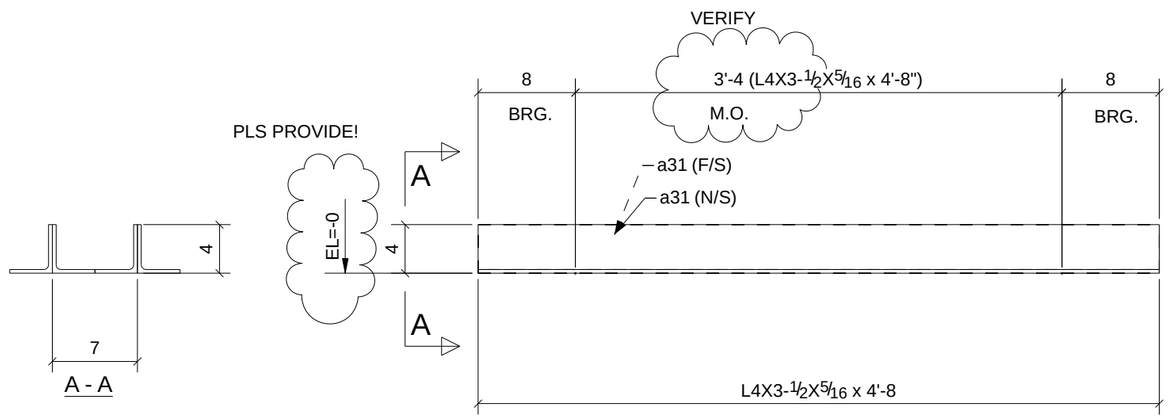

L-11 (M.O.=3'-4") LOCATION (2242A)
(2202)

ARCH./ENG/OWNER
PLEASE VERIFY / PROVIDE
TYPE & LOCATIONS
ERECTOR / GC ~ PLEASE
VERIFY / PROVIDE
M.O. @ EACH LOCATION

REV.	DESCRIPTION	DATE	DWN	CHK
A	For Approval	7/23/10	TMc	TAN

PHASE				
1	2	3	4	5
2	0	0	0	0

2 - LINTELS - 12L17

(4 ANGLES EACH LINTEL)

GENERAL NOTES

MATERIAL: A992 / A36
ELECTRODES: E70XX LH
REF. DRG.
HOLES: 13/16 DIA. U/N
CONN'S.: -
SURFACE PREP. AND PAINT: SSPC-SP-2
GREY PRIMER DEVOE NA-195 (U.N,)

JOB USE
SHOP
APPROVAL

DESCRIPTION: LINTEL
PROJECT NAME: Hamilton High School Phase III
LOCATION: Hamilton City School District - Hamilton
CONTRACTOR: GC Contracting

BILL OF MATERIAL

SHIP	MARK	NO PCS	DESCRIPTION	LENGTH	PIECE MARK	REMARKS
2	12L17	2	L4X3-1/2X5/16	4'-8"		SQ-2 A36 1 S/C STD PRIMER
		6	L4X3-1/2X5/16	4'-8"	a31	A36 1 S/C STD PRIMER

Avenue Fabricating Inc.
1281 Clough Pike
Batavia, OH 45103
(513) 752-1911

DRAWN BY	DATE	
TMc	07/23/2010	
CHKD. BY	DATE	
TAN		
JOB No.	DRG. No.	REV.
10-16	12L17	1

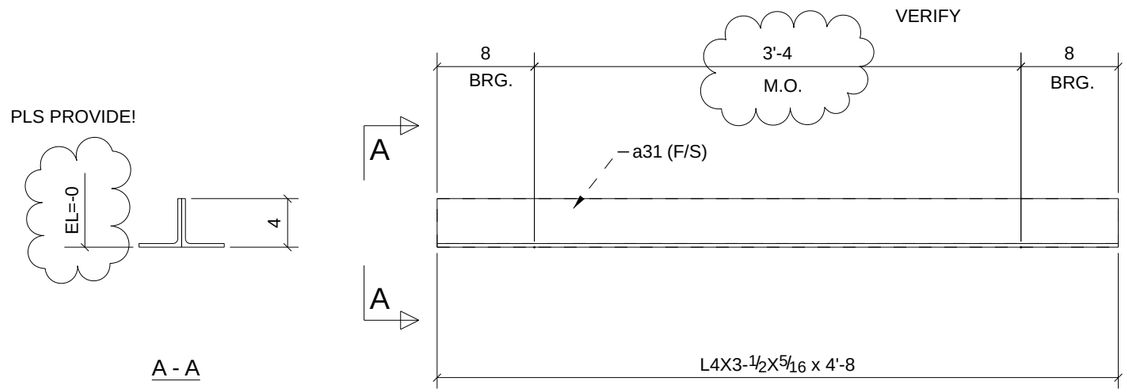

L-4 (M.O.=3'-4") LOCATION ((2213A) (2214) (2215A) (2216) 2233) (2234) (2235) (2236)

ARCH./ENG/OWNER
PLEASE VERIFY / PROVIDE
TYPE & LOCATIONS
ERECTOR / GC ~ PLEASE
VERIFY / PROVIDE
M.O. @ EACH LOCATION

REV.	DESCRIPTION	DATE	DWN	CHK
A	For Approval	7/23/10	TMc	TAN

PHASE				
1	2	3	4	5
8	0	0	0	0

8 - LINTELS - 12L21

(2 ANGLES EACH LINTEL)

GENERAL NOTES

MATERIAL: A992 / A36
ELECTRODES: E70XX LH
REF. DRG.
HOLES: 13/16 DIA. U/N
CONN'S.: -
SURFACE PREP. AND PAINT: SSPC-SP-2 GREY PRIMER DEVOE NA-195 (U.N,)

JOB USE
SHOP
APPROVAL

DESCRIPTION: LINTEL
PROJECT NAME: Hamilton High School Phase III
LOCATION: Hamilton City School District - Hamilton
CONTRACTOR: GC Contracting

BILL OF MATERIAL

SHIP	MARK	NO PCS	DESCRIPTION	LENGTH	PIECE MARK	REMARKS
8	12L21	8	L4X3-1/2X5/16	4'-8"		SQ-2 A36 1 S/C STD PRIMER
		8	L4X3-1/2X5/16	4'-8"	a31	A36 1 S/C STD PRIMER

Avenue Fabricating Inc.
1281 Clough Pike
Batavia, OH 45103
(513) 752-1911

DRAWN BY	DATE	
TMc	07/23/2010	
CHKD. BY	DATE	
TAN		
JOB No.	DRG. No.	REV.
10-16	12L21	1

PLS PROVIDE!

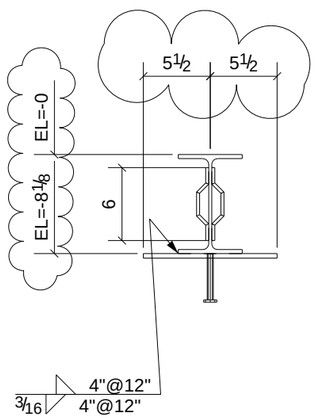

A - A

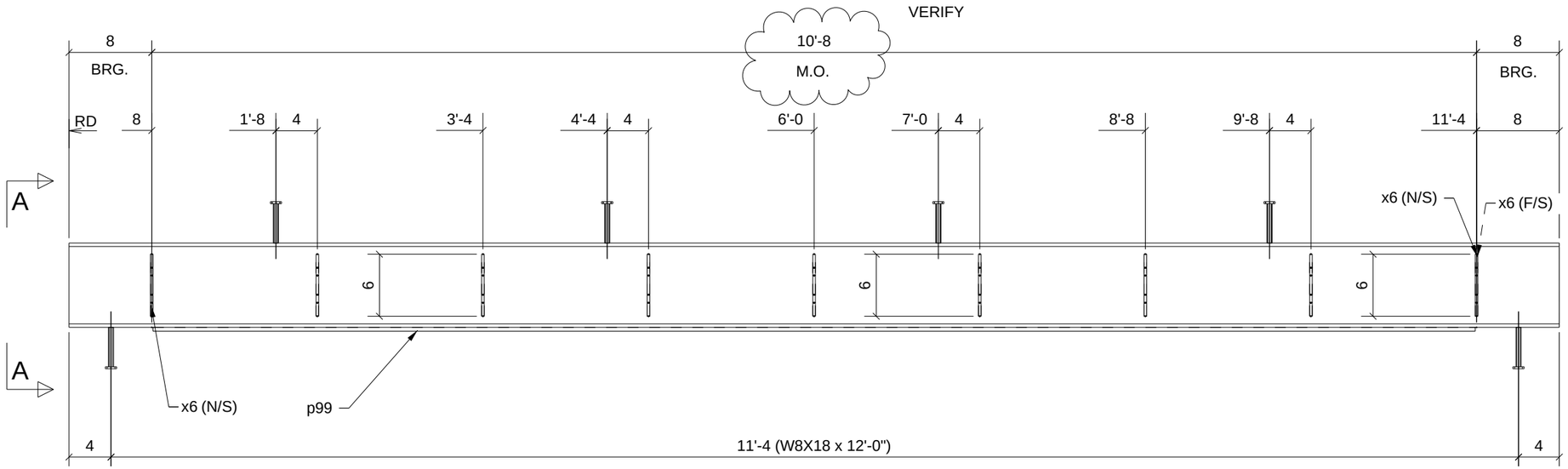

L-5 (M.O.=10'-8") LOCATION ( ) (2231) (2218)

ARCH./ENG/OWNER
PLEASE VERIFY / PROVIDE
TYPE & LOCATIONS
ERECTOR / GC ~ PLEASE
VERIFY / PROVIDE
M.O. @ EACH LOCATION

2 - LINTELS - 12L24

PHASE				
1	2	3	4	5
2	0	0	0	0

W	8 1/8"x1/4"
F	5 1/4"x5/16"

REV.	DESCRIPTION	DATE	DWN	CHK
A	For Approval	7/23/10	TMc	TAN

GENERAL NOTES

MATERIAL: A992 / A36
ELECTRODES: E70XX LH
REF. DRG.
HOLES: 13/16 DIA. U/N
CONN'S.: -
SURFACE PREP. AND PAINT: SSPC-SP-2 GREY PRIMER DEVOE NA-195 (U.N,)

JOB USE
SHOP
APPROVAL

DESCRIPTION: LINTEL
PROJECT NAME: Hamilton High School Phase III
LOCATION: Hamilton City School District - Hamilton
CONTRACTOR: GC Contracting

BILL OF MATERIAL

SHIP	MARK	NO PCS	DESCRIPTION	LENGTH	PIECE MARK	REMARKS
2	12L24	2	W8X18	12'-0"		SQ-2 A992 GALVANIZED
		2	BAR3/8"X11"	10'-7 3/4"	p99	A36 GALVANIZED
		36	H&B #359	0'-6 3/16"	x6	A36 GALVANIZED
		12	STUD 1/2" DIA	0'-4"		

Avenue Fabricating Inc.
1281 Clough Pike
Batavia, OH 45103
(513) 752-1911

DRAWN BY	DATE	
TMc	07/23/2010	
CHKD. BY	DATE	
TAN		
JOB No.	DRG. No.	REV.
10-16	12L24	1

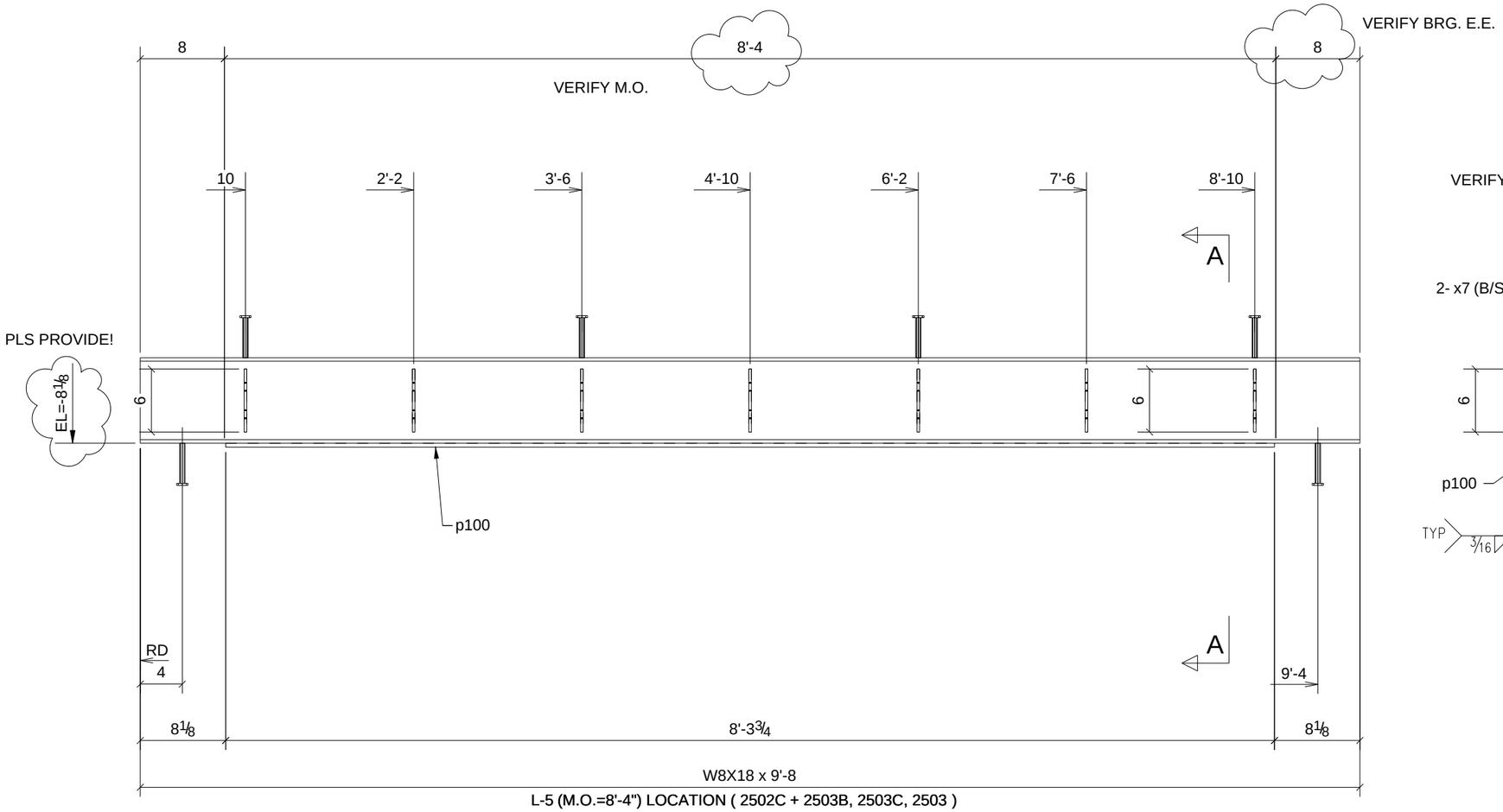

L-5 (M.O.=8'-4") LOCATION (2502C + 2503B, 2503C, 2503)

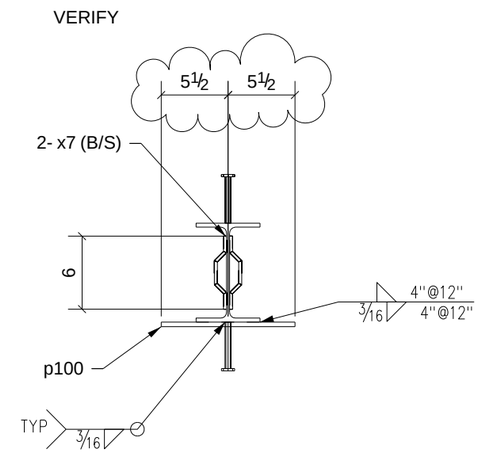

A - A

4 - LINTELS - 12L25

PHASE				
1	2	3	4	5
4	0	0	0	0

W	8 1/8"x1/4"
F	5 1/4"x5/16"

REV.	DESCRIPTION	DATE	DWN	CHK
A	For Approval	7/23/10	TMc	TAN

GENERAL NOTES

MATERIAL: A992 / A36	ELECTRODES: E70XX LH	REF. DRG.	JOB USE
HOLES: 13/16 DIA. U/N	CONN'S.: -		SHOP
SURFACE PREP. AND PAINT: SSPC-SP-2 GREY PRIMER DEVOE NA-195 (U.N,)			APPROVAL

DESCRIPTION: LINTEL

PROJECT NAME: Hamilton High School Phase III
LOCATION: Hamilton City School District - Hamilton

CONTRACTOR: GC Contracting

BILL OF MATERIAL

SHIP	MARK	NO PCS	DESCRIPTION	LENGTH	PIECE MARK	REMARKS
4	12L25	4	W8X18	9'-8"		SQ-2 A992 1 S/C STD PRIMER
		4	BAR3/8"X11"	8'-3 3/4"	p100	A36 1 S/C STD PRIMER
		56	H&B #359	0'-6 3/16"	x7	A36 1 S/C STD PRIMER
		24	STUD 1/2" DIA	0'-4"		

Avenue Fabricating Inc.
1281 Clough Pike
Batavia, OH 45103
(513) 752-1911

DRAWN BY TMc	DATE 07/23/2010	
CHKD. BY TAN	DATE	
JOB No. 10-16	DRG. No. 12L25	REV. 1

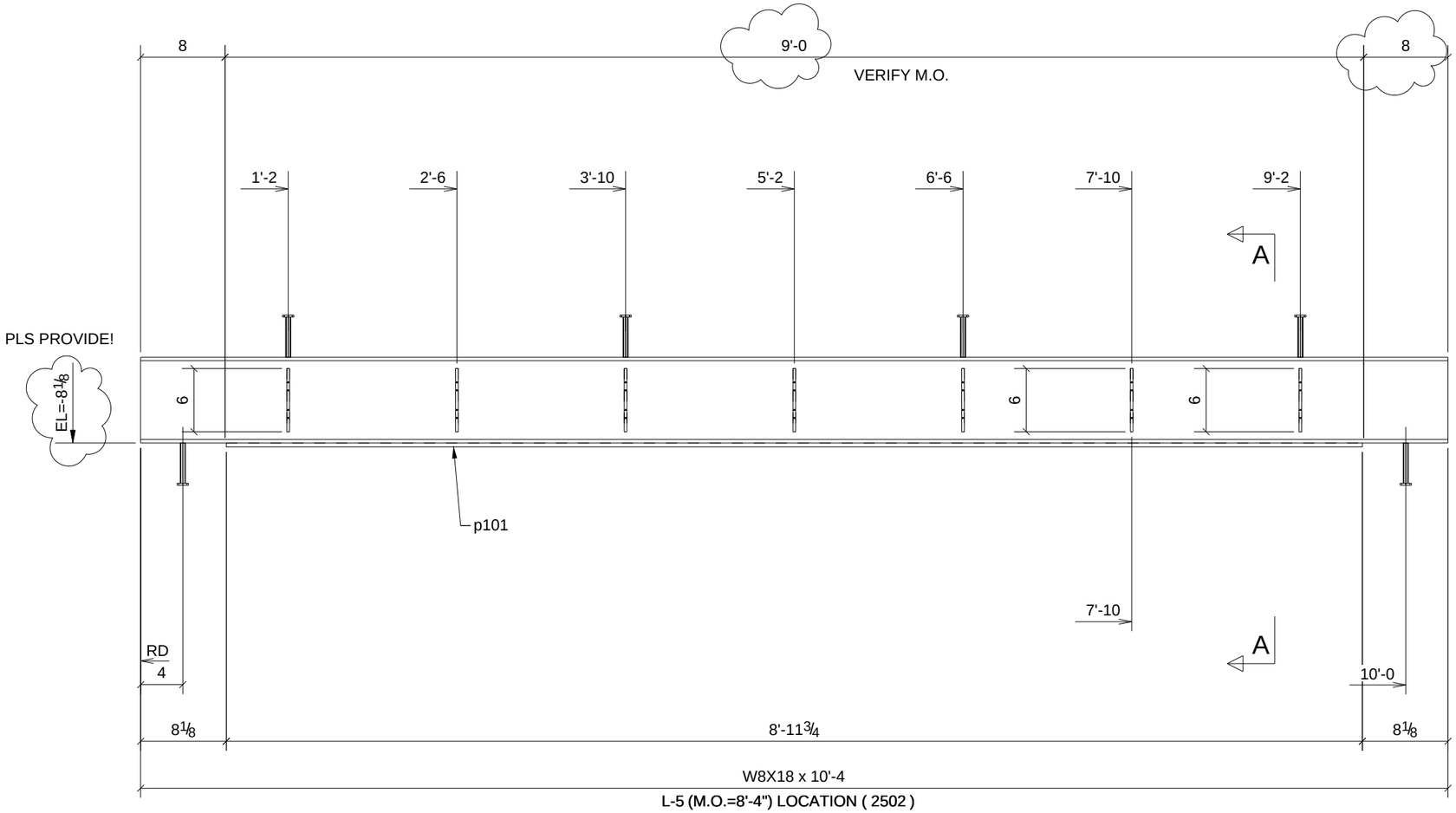

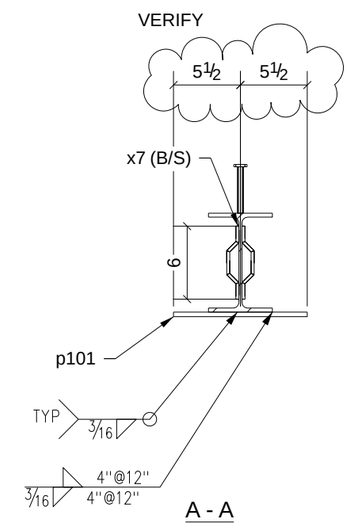

ARCH./ENG/OWNER
PLEASE VERIFY / PROVIDE
TYPE & LOCATIONS
ERECTOR / GC ~ PLEASE
VERIFY / PROVIDE
M.O. @ EACH LOCATION

ONE - LINTEL - 12L26

PHASE				
1	2	3	4	5
1	0	0	0	0

W	8 1/8"x1/4"
F	5 1/4"x5/16"

REV.	DESCRIPTION	DATE	DWN	CHK
A	For Approval	7/23/10	TMc	TAN

GENERAL NOTES

MATERIAL: A992 / A36
ELECTRODES: E70XX LH
REF. DRG.
HOLES: 13/16 DIA. U/N
CONN'S.: -
SURFACE PREP. AND PAINT: SSPC-SP-2 GREY PRIMER DEVOE NA-195 (U.N,)

JOB USE
SHOP
APPROVAL

DESCRIPTION: LINTEL
PROJECT NAME: Hamilton High School Phase III
LOCATION: Hamilton City School District - Hamilton
CONTRACTOR: GC Contracting

BILL OF MATERIAL

SHIP	MARK	NO PCS	DESCRIPTION	LENGTH	PIECE MARK	REMARKS
1	12L26	1	W8X18	10'-4"		SQ-2 A992 1 S/C STD PRIMER
		1	BAR3/8"X11"	8'-11 3/4"	p101	A36 1 S/C STD PRIMER
		14	H&B #359	0'-6 3/16"	x7	A36 1 S/C STD PRIMER
		6	STUD 1/2" DIA	0'-4"		

Avenue Fabricating Inc.
1281 Clough Pike
Batavia, OH 45103
(513) 752-1911

DRAWN BY	DATE	
TMc	07/23/2010	
CHKD. BY	DATE	
TAN		
JOB No.	DRG. No.	REV.
10-16	12L26	1

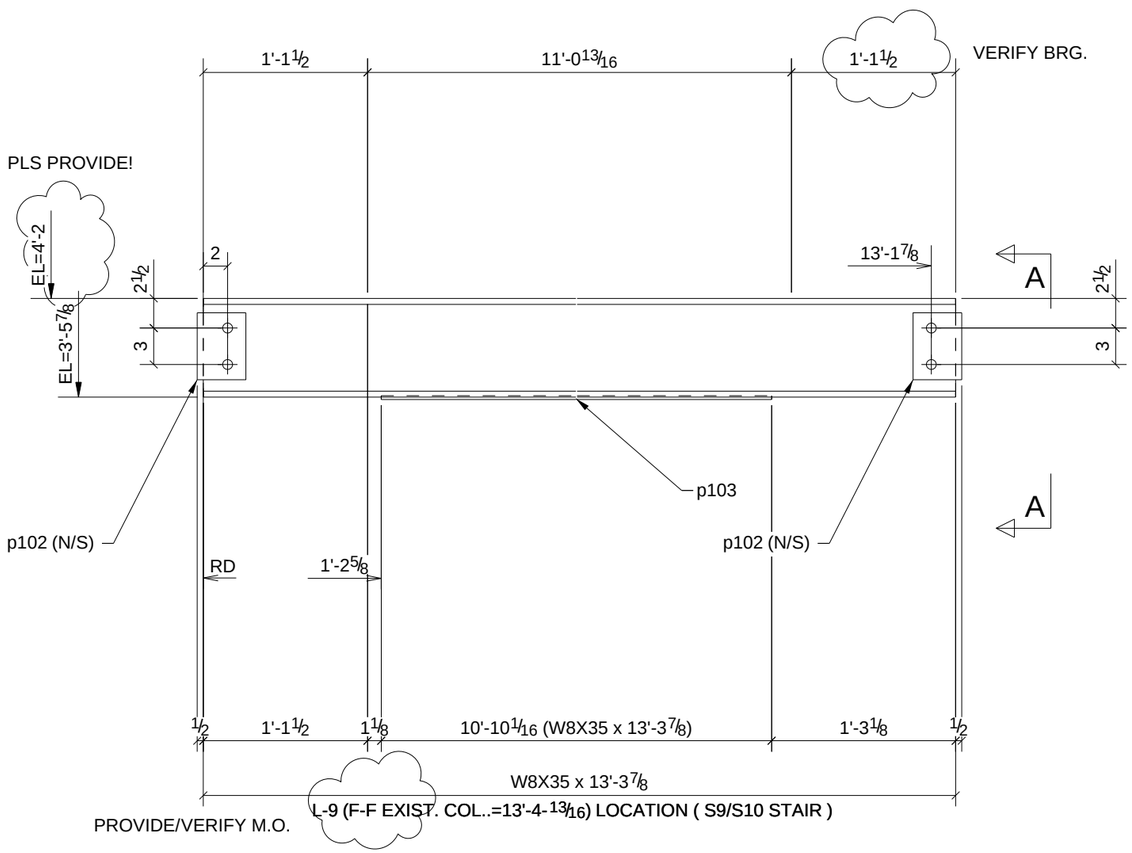

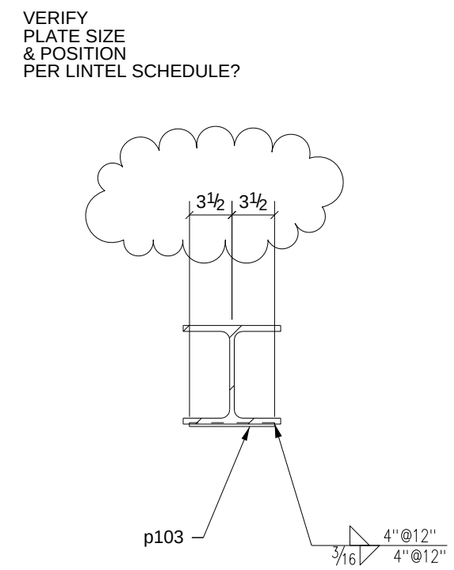

A - A

ONE - LINTEL - 12L27

PHASE				
1	2	3	4	5
1	0	0	0	0

W	8 1/8"x1/4"
F	8"x1/2"

REV.	DESCRIPTION	DATE	DWN	CHK
A	For Approval	7/23/10	TMc	TAN

GENERAL NOTES

MATERIAL: A992 / A36
ELECTRODES: E70XX LH
REF. DRG.
HOLES: 13/16 DIA. U/N
CONN'S.: -
SURFACE PREP. AND PAINT: SSPC-SP-2 GREY PRIMER DEVOE NA-195 (U.N,)

JOB USE
SHOP
APPROVAL

DESCRIPTION: LINTEL
PROJECT NAME: Hamilton High School Phase III
LOCATION: Hamilton City School District - Hamilton
CONTRACTOR: GC Contracting

BILL OF MATERIAL

SHIP	MARK	NO PCS	DESCRIPTION	LENGTH	PIECE MARK	REMARKS
1	12L27	1	W8X35	13'-3 7/8"		SQ-2 A992
		2	BAR3/8"X4"	0'-5 1/2"	p102	A36
		1	BAR5/16"X7"	10'-10 1/16"	p103	A36 GALVANIZED
		4	3/4"Ø A325N BOLT	0'-2"		

Avenue Fabricating Inc.
1281 Clough Pike
Batavia, OH 45103
(513) 752-1911

DRAWN BY	DATE	
TMc	07/25/2010	
CHKD. BY	DATE	
TAN		
JOB No.	DRG. No.	REV.
10-16	12L27	1

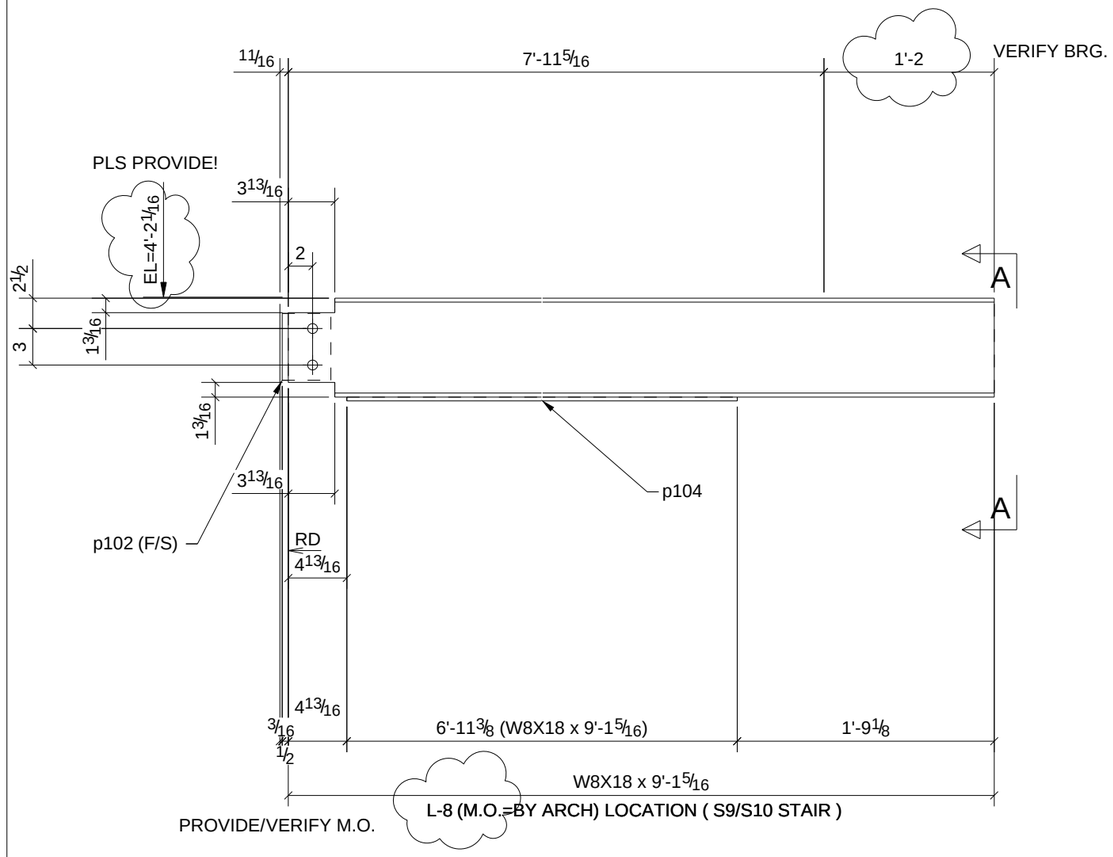

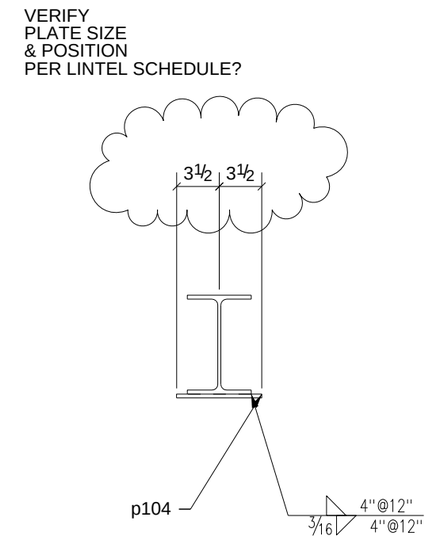

A - A

ONE - LINTEL - 12L40

PHASE				
1	2	3	4	5
1	0	0	0	0

W	8 1/8"x1/4"
F	5 1/4"x5/16"

REV.	DESCRIPTION	DATE	DWN	CHK
A	For Approval	7/23/10	TMc	TAN

GENERAL NOTES

MATERIAL: A992 / A36
ELECTRODES: E70XX LH
REF. DRG.
HOLES: 13/16 DIA. U/N
CONN'S.: -
SURFACE PREP. AND PAINT: SSPC-SP-2 GREY PRIMER DEVOE NA-195 (U.N,)

JOB USE
SHOP
APPROVAL

DESCRIPTION: LINTEL
PROJECT NAME: Hamilton High School Phase III
LOCATION: Hamilton City School District - Hamilton
CONTRACTOR: GC Contracting

BILL OF MATERIAL

SHIP	MARK	NO PCS	DESCRIPTION	LENGTH	PIECE MARK	REMARKS
1	12L40	1	W8X18	9'-1 5/16"		SQ-2 A992
		1	BAR3/8"X4"	0'-5 1/2"	p102	A36
		1	BAR5/16"X7"	6'-11 3/8"	p104	A36 GALVANIZED
		2	3/4"Ø A325N BOLT	0'-1 3/4"		

Avenue Fabricating Inc.
1281 Clough Pike
Batavia, OH 45103
(513) 752-1911

DRAWN BY	DATE	
TMc	07/25/2010	
CHKD. BY	DATE	
TAN		
JOB No.	DRG. No.	REV.
10-16	12L40	1

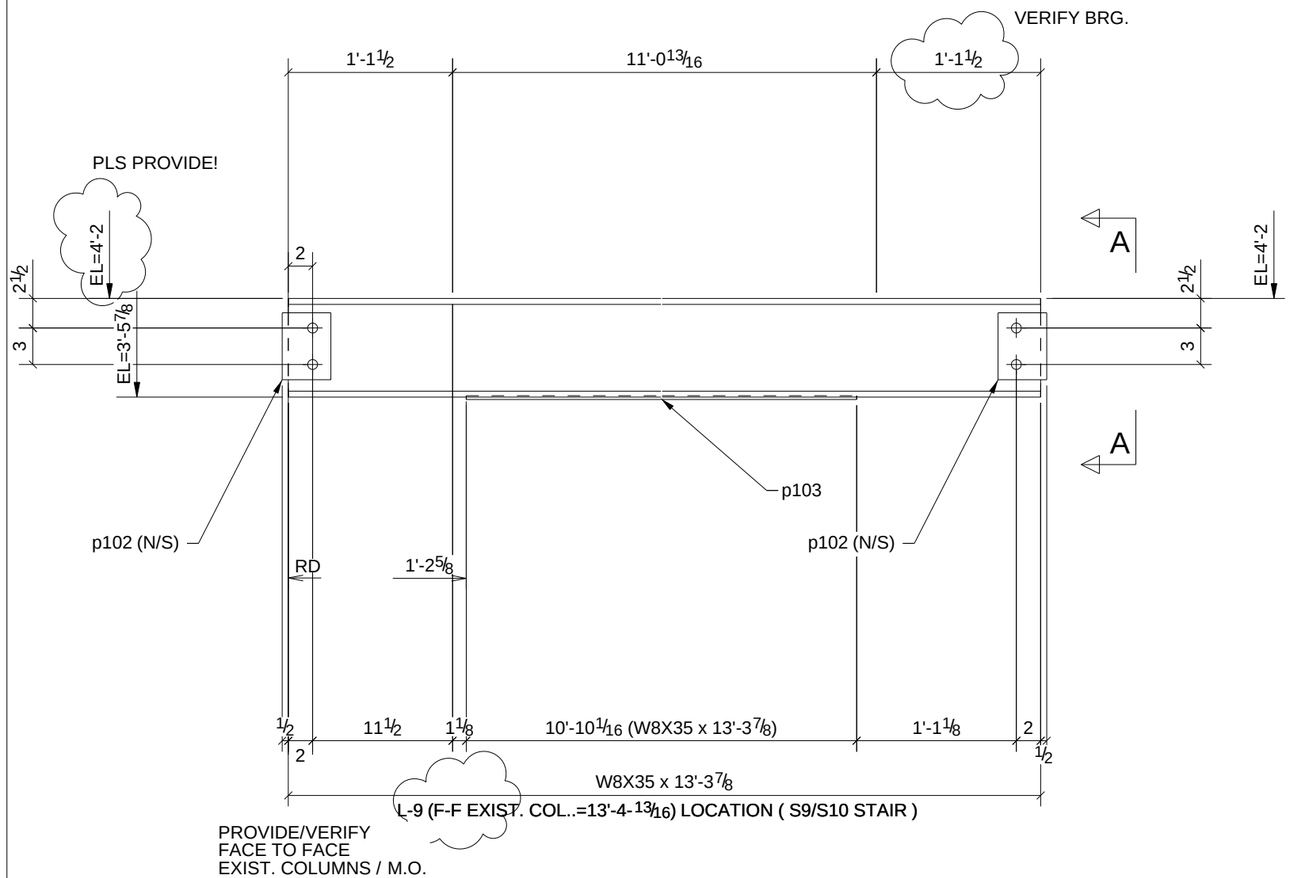

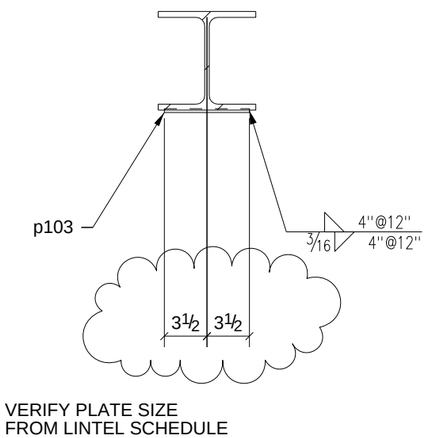

A - A

ONE - LINTEL - 12L41

PHASE				
1	2	3	4	5
1	0	0	0	0

W	8 1/8"x1/4"
F	8"x1/2"

REV.	DESCRIPTION	DATE	DWN	CHK
A	For Approval	7/23/10	TMc	TAN

GENERAL NOTES

MATERIAL: A992 / A36
ELECTRODES: E70XX LH
REF. DRG.
HOLES: 13/16 DIA. U/N
CONN'S.: -
SURFACE PREP. AND PAINT: SSPC-SP-2 GREY PRIMER DEVOE NA-195 (U.N,)

JOB USE
SHOP
APPROVAL

DESCRIPTION: LINTEL
PROJECT NAME: Hamilton High School Phase III
LOCATION: Hamilton City School District - Hamilton
CONTRACTOR: GC Contracting

BILL OF MATERIAL

SHIP	MARK	NO PCS	DESCRIPTION	LENGTH	PIECE MARK	REMARKS
1	12L41	1	W8X35	13'-3 7/8"		SQ-2 A992
		2	BAR3/8"X4"	0'-5 1/2"	p102	A36
		1	BAR5/16"X7"	10'-10 1/16"	p103	A36 GALVANIZED
		4	3/4"Ø A325N BOLT	0'-2"		

Avenue Fabricating Inc.
1281 Clough Pike
Batavia, OH 45103
(513) 752-1911

DRAWN BY	DATE	
TMc	07/25/2010	
CHKD. BY	DATE	
TAN		
JOB No.	DRG. No.	REV.
10-16	12L41	1

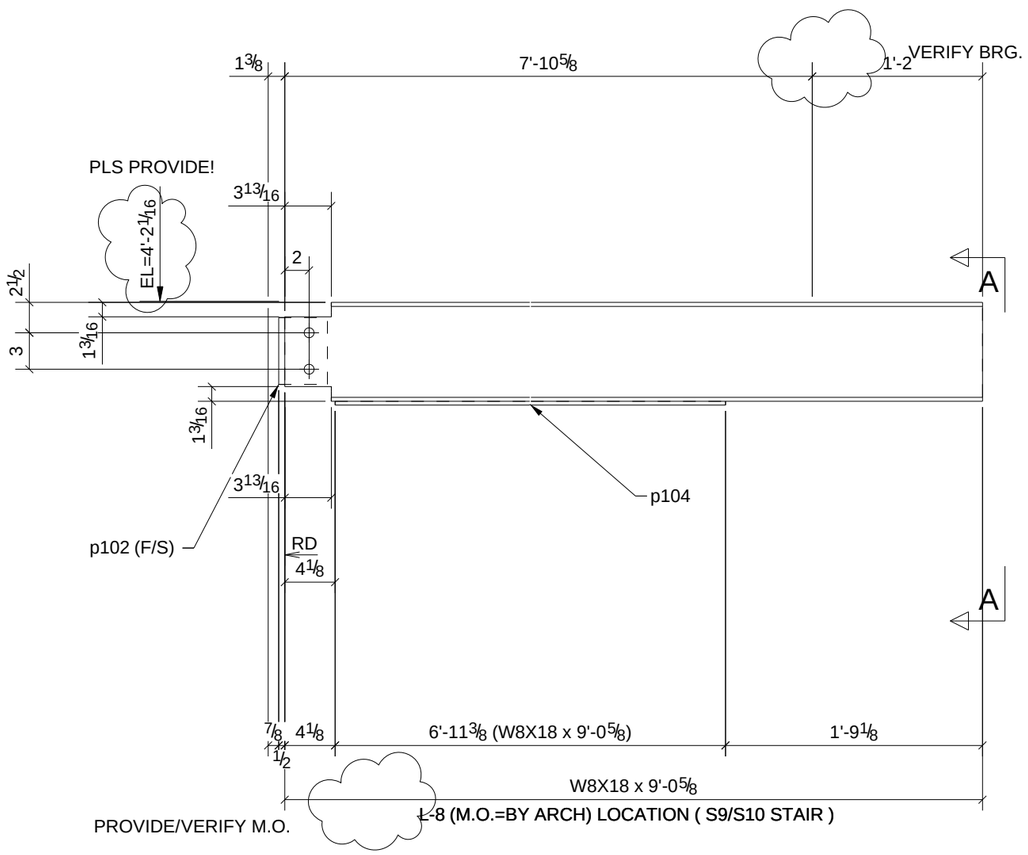

VERIFY
PLATE SIZE
& POSITION
PER LINTEL SCHEDULE?

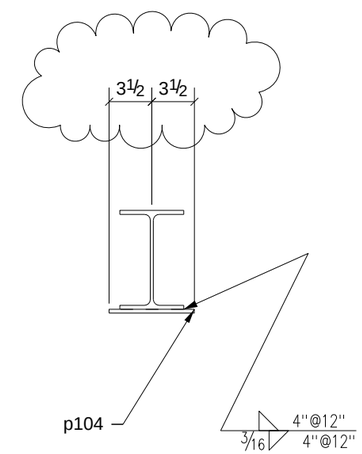

A - A

ONE - LINTEL - 12L43

PHASE				
1	2	3	4	5
1	0	0	0	0

W	8 1/8"x1/4"
F	5 1/4"x5/16"

REV.	DESCRIPTION	DATE	DWN	CHK
A	For Approval	7/23/10	TMc	TAN

GENERAL NOTES

MATERIAL: A992 / A36
ELECTRODES: E70XX LH
REF. DRG.
HOLES: 13/16 DIA. U/N
CONN'S.: -
SURFACE PREP. AND PAINT: SSPC-SP-2 GREY PRIMER DEVOE NA-195 (U.N,)

JOB USE
SHOP
APPROVAL

DESCRIPTION: LINTEL
PROJECT NAME: Hamilton High School Phase III
LOCATION: Hamilton City School District - Hamilton
CONTRACTOR: GC Contracting

BILL OF MATERIAL

SHIP	MARK	NO PCS	DESCRIPTION	LENGTH	PIECE MARK	REMARKS
1	12L43	1	W8X18	9'-0 5/8"		SQ-2 A992
		1	BAR3/8"X4"	0'-5 1/2"	p102	A36
		1	BAR5/16"X7"	6'-11 3/8"	p104	A36 GALVANIZED
		2	3/4"Ø A325N BOLT	0'-1 3/4"		

Avenue Fabricating Inc.
1281 Clough Pike
Batavia, OH 45103
(513) 752-1911

DRAWN BY	DATE	
TMc	07/25/2010	
CHKD. BY	DATE	
TAN		
JOB No.	DRG. No.	REV.
10-16	12L43	1

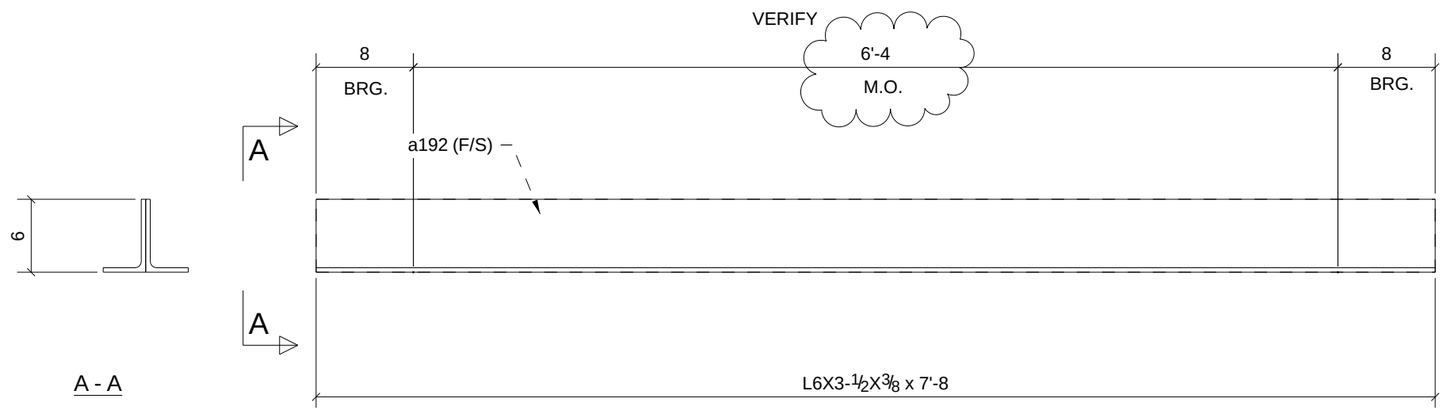

L-6 (M.O.=6'-0 3/16) LOCATION (2009)

(2005)

ARCH./ENG/OWNER
PLEASE VERIFY / PROVIDE
TYPE & LOCATIONS
ERECTOR / GC ~ PLEASE
VERIFY / PROVIDE
M.O. @ EACH LOCATION

REV.	DESCRIPTION	DATE	DWN	CHK
A	For Approval	7/23/10	TMc	TAN

PHASE				
1	2	3	4	5
2	0	0	0	0

2 - LINTELS - 12L7

(3 ANGLES EACH LINTEL)

GENERAL NOTES

MATERIAL: A992 / A36
ELECTRODES: E70XX LH
REF. DRG.
HOLES: 13/16 DIA. U/N
CONN'S.: -
SURFACE PREP. AND PAINT: SSPC-SP-2 GREY PRIMER DEVOE NA-195 (U.N,)

JOB USE
SHOP
APPROVAL

DESCRIPTION: LINTEL

PROJECT NAME: Hamilton High School Phase III
LOCATION: Hamilton City School District - Hamilton

CONTRACTOR: GC Contracting

BILL OF MATERIAL

SHIP	MARK	NO PCS	DESCRIPTION	LENGTH	PIECE MARK	REMARKS
2	12L7	2	L6X3-1/2X3/8	7'-8"		SQ-2 A36 1 S/C STD PRIMER
		2	L6X3-1/2X3/8	7'-8"	a192	A36 1 S/C STD PRIMER

Avenue Fabricating Inc.
1281 Clough Pike
Batavia, OH 45103
(513) 752-1911

DRAWN BY	DATE	
TMc	07/23/2010	
CHKD. BY	DATE	
TAN		
JOB No.	DRG. No.	REV.
10-16	12L7	1

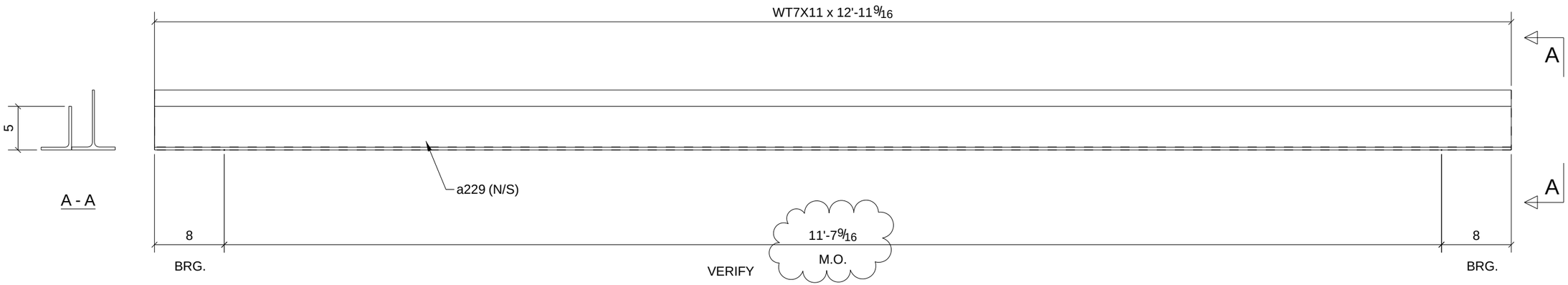

L-10 (M.O.=11'-7-9/16") LOCATION (2242)
(2202)

ARCH./ENG/OWNER
PLEASE VERIFY / PROVIDE
TYPE & LOCATIONS
ERECTOR / GC ~ PLEASE
VERIFY / PROVIDE
M.O. @ EACH LOCATION

REV.	DESCRIPTION	DATE	DWN	CHK
A	For Approval	7/23/10	TMc	TAN

PHASE				
1	2	3	4	5
2	0	0	0	0

2 - LINTELS - 12L8

(1 ANGLE / 1 TEE EACH LINTEL)

GENERAL NOTES

MATERIAL: A992 / A36
ELECTRODES: E70XX LH
REF. DRG.
HOLES: 13/16 DIA. U/N
CONN'S.: -
SURFACE PREP. AND PAINT: SSPC-SP-2 GREY PRIMER DEVOE NA-195 (U.N,)

JOB USE
SHOP
APPROVAL

DESCRIPTION: LINTEL
PROJECT NAME: Hamilton High School Phase III
LOCATION: Hamilton City School District - Hamilton
CONTRACTOR: GC Contracting

BILL OF MATERIAL

SHIP	MARK	NO PCS	DESCRIPTION	LENGTH	PIECE MARK	REMARKS
2	12L8	2	WT7X11	12'-11 9/16"		SQ-2 A36 GALVANIZED
		2	L5X3-1/2X5/16	12'-11 9/16"	a229	A36 GALVANIZED

Avenue Fabricating Inc.
1281 Clough Pike
Batavia, OH 45103
(513) 752-1911

DRAWN BY	DATE	
TMc	07/23/2010	
CHKD. BY: TAN	DATE	
JOB No.: 10-16	DRG. No.: 12L8	REV.: 1

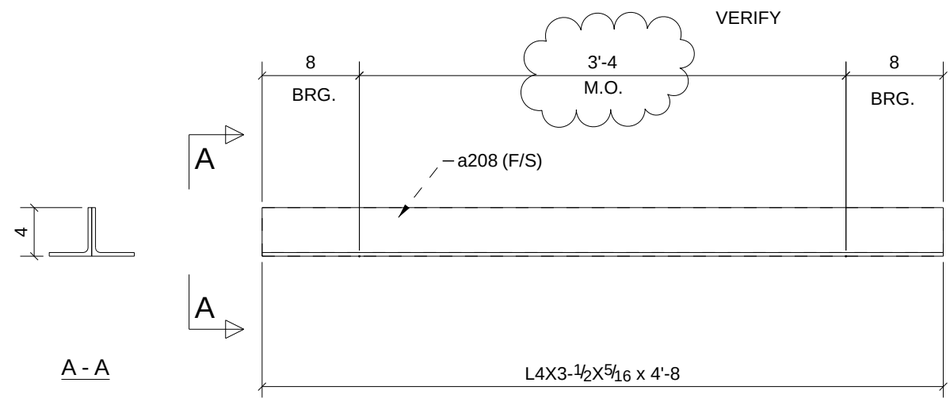

L-4 (M.O.=3'-4") LOCATION (1246)

NEAR
1022

ARCH./ENG/OWNER
PLEASE VERIFY / PROVIDE
TYPE & LOCATIONS
ERECTOR / GC ~ PLEASE
VERIFY / PROVIDE
M.O. @ EACH LOCATION

REV.	DESCRIPTION	DATE	DWN	CHK
A	For Approval	7/20/10	TMc	TAN

PHASE				
1	2	3	4	5
1	0	0	0	0

ONE - LINTEL - 12L9

(2 ANGLES EACH LINTEL)

GENERAL NOTES

MATERIAL: A992 / A36
ELECTRODES: E70XX LH
REF. DRG.
HOLES: 13/16 DIA. U/N
CONN'S.: -
SURFACE PREP. AND PAINT: SSPC-SP-2 GREY PRIMER DEVOE NA-195 (U.N,)

JOB USE
SHOP
APPROVAL

DESCRIPTION: LINTEL
PROJECT NAME: Hamilton High School Phase III
LOCATION: Hamilton City School District - Hamilton
CONTRACTOR: GC Contracting

BILL OF MATERIAL

SHIP	MARK	NO PCS	DESCRIPTION	LENGTH	PIECE MARK	REMARKS
1	12L9	1	L4X3-1/2X5/16	4'-8"		SQ-2 A36 GALVANIZED
		1	L4X3-1/2X5/16	4'-8"	a208	A36 GALVANIZED

Avenue Fabricating Inc.
1281 Clough Pike
Batavia, OH 45103
(513) 752-1911

DRAWN BY TMc	DATE 07/20/2010		
CHKD. BY TAN	DATE		
JOB No. 10-16	DRG. No. 12L9	REV. 1	

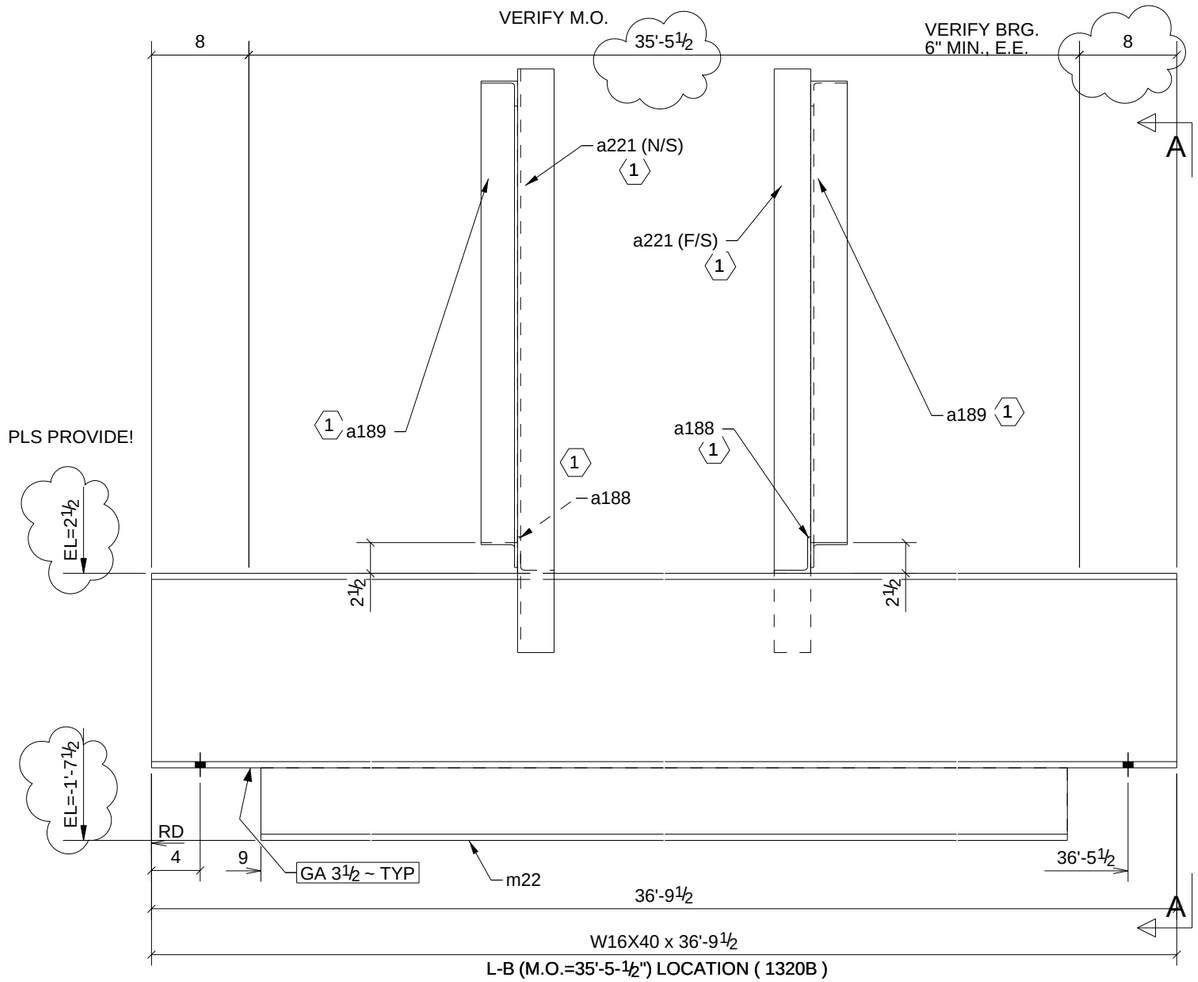

ONE - LINTEL - 22L1

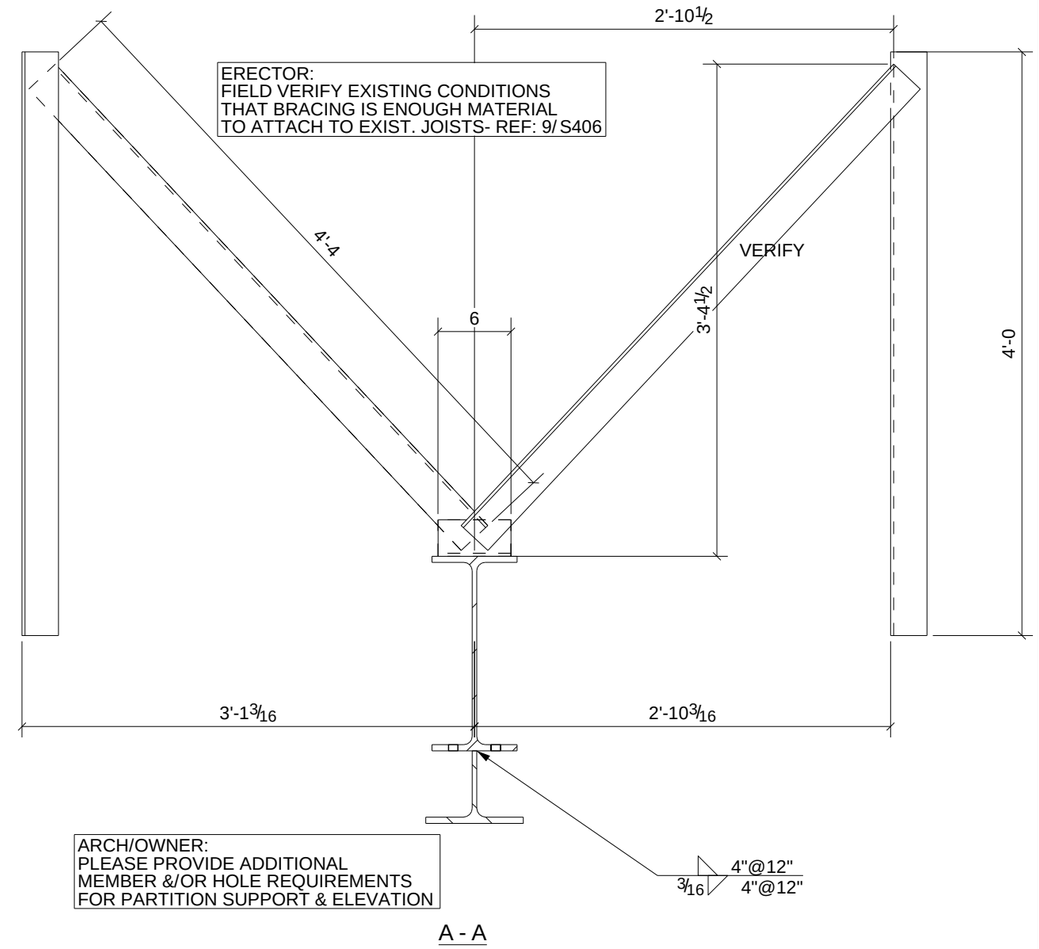

A - A

PHASE				
1	2	3	4	5
0	1	0	0	0

W	16"x1/4"
F	7"x1/2"

1 SHOP NOTE: MARK WITH SHIP & PC MK. & SHIP LOOSE WITH BEAM

BILL OF MATERIAL

SHIP	MARK	NO PCS	DESCRIPTION	LENGTH	PIECE MARK	REMARKS
1	22L1	1	W16X40	36'-9 1/2"		SQ-2 A992 1 S/C STD PRIMER
		2	L3X3X1/4	0'-6"	a188	A36 1 S/C STD PRIMER
		2	L3X3X1/4	4'-4"	a189	A36 1 S/C STD PRIMER
		2	L3X3X1/4	4'-0"	a221	A36 1 S/C STD PRIMER
		1	WT6X20	35'-3 1/2"	m22	A36 1 S/C STD PRIMER

REV.	DESCRIPTION	DATE	DWN	CHK
A	For Approval	7/20/10	TMc	TAN

GENERAL NOTES

MATERIAL: A992 / A36
ELECTRODES: E70XX LH
REF. DRG.
HOLES: 13/16 DIA. U/N
CONN'S.: -
SURFACE PREP. AND PAINT: SSPC-SP-2 GREY PRIMER DEVOE NA-195 (U.N,)

JOB USE
SHOP
APPROVAL

DESCRIPTION: LINTEL
PROJECT NAME: Hamilton High School Phase III
LOCATION: Hamilton City School District - Hamilton
CONTRACTOR: GC Contracting

Avenue Fabricating Inc.
1281 Clough Pike
Batavia, OH 45103
(513) 752-1911

DRAWN BY	DATE	
TMc	07/19/2010	
CHKD. BY	DATE	
TAN		
JOB No.	DRG. No.	REV.
10-16	22L1	1

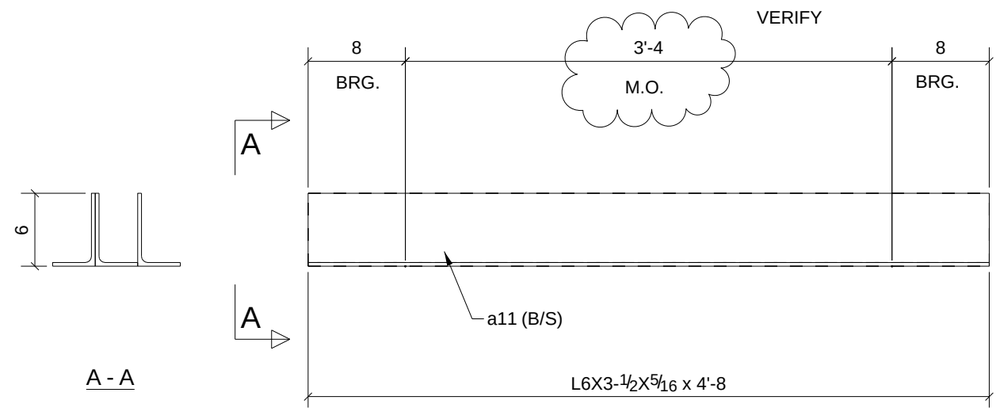

L-7 (M.O.=3'-4") LOCATION (M6?) NEAR 1313

ARCH./ENG/OWNER
PLEASE VERIFY / PROVIDE
TYPE & LOCATIONS
ERECTOR / GC ~ PLEASE
VERIFY / PROVIDE
M.O. @ EACH LOCATION

REV.	DESCRIPTION	DATE	DWN	CHK
A	For Approval	7/20/10	TMc	TAN

PHASE				
1	2	3	4	5
0	1	0	0	0

ONE - LINTEL - 22L10

(3 ANGLES EACH LINTEL)

GENERAL NOTES

MATERIAL: A992 / A36
ELECTRODES: E70XX LH
REF. DRG.
HOLES: 13/16 DIA. U/N
CONN'S.: -
SURFACE PREP. AND PAINT: SSPC-SP-2 GREY PRIMER DEVOE NA-195 (U.N,)

JOB USE
SHOP
APPROVAL

DESCRIPTION: LINTEL
PROJECT NAME: Hamilton High School Phase III
LOCATION: Hamilton City School District - Hamilton
CONTRACTOR: GC Contracting

BILL OF MATERIAL

SHIP	MARK	NO PCS	DESCRIPTION	LENGTH	PIECE MARK	REMARKS
1	22L10	1	L6X3-1/2X5/16	4'-8"		SQ-2 A36 1 S/C STD PRIMER
		2	L6X3-1/2X5/16	4'-8"	a11	A36 1 S/C STD PRIMER

Avenue Fabricating Inc.
1281 Clough Pike
Batavia, OH 45103
(513) 752-1911

DRAWN BY TMc	DATE 07/20/2010		
CHKD. BY TAN	DATE		
JOB No. 10-16	DRG. No. 22L10	REV. 1	

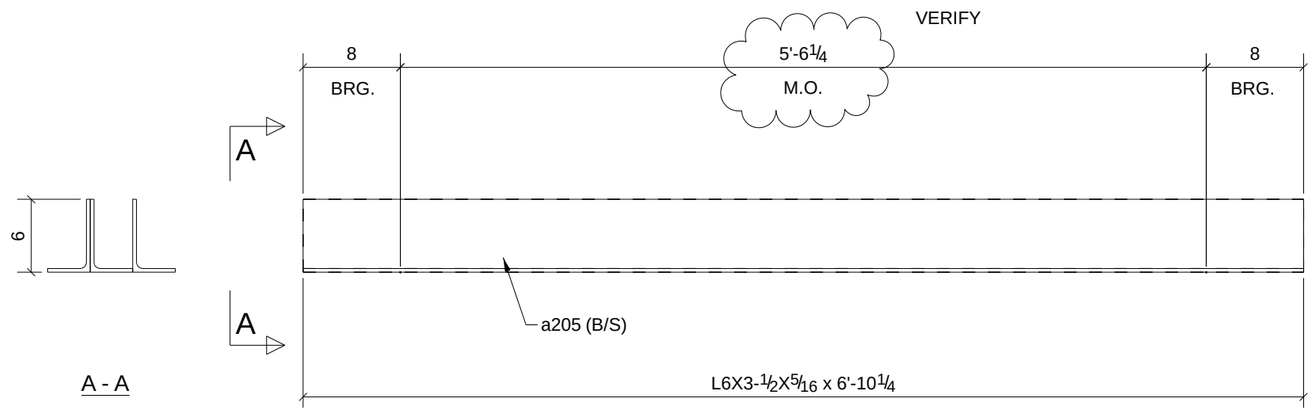

L-7 (M.O.=5'-4") LOCATION (M6?)

NEAR
1313

ARCH./ENG/OWNER
PLEASE VERIFY / PROVIDE
TYPE & LOCATIONS
ERECTOR / GC ~ PLEASE
VERIFY / PROVIDE
M.O. @ EACH LOCATION

REV.	DESCRIPTION	DATE	DWN	CHK
A	For Approval	7/20/10	TMc	TAN

PHASE				
1	2	3	4	5
0	1	0	0	0

ONE - LINTEL - 22L11

(3 ANGLES EACH LINTEL)

GENERAL NOTES

MATERIAL: A992 / A36
ELECTRODES: E70XX LH
REF. DRG.
HOLES: 13/16 DIA. U/N
CONN'S.: -
SURFACE PREP. AND PAINT: SSPC-SP-2
GREY PRIMER DEVOE NA-195 (U.N,)

JOB USE
SHOP
APPROVAL

DESCRIPTION: LINTEL
PROJECT NAME: Hamilton High School Phase III
LOCATION: Hamilton City School District - Hamilton
CONTRACTOR: GC Contracting

BILL OF MATERIAL

SHIP	MARK	NO PCS	DESCRIPTION	LENGTH	PIECE MARK	REMARKS
1	22L11	1	L6X3-1/2X5/16	6'-10 1/4"		SQ-2 A36 1 S/C STD PRIMER
		2	L6X3-1/2X5/16	6'-10 1/4"	a205	A36 1 S/C STD PRIMER

Avenue Fabricating Inc.
1281 Clough Pike
Batavia, OH 45103
(513) 752-1911

DRAWN BY	DATE	
TMc	07/20/2010	
CHKD. BY	DATE	
TAN		
JOB No.	DRG. No.	REV.
10-16	22L11	1

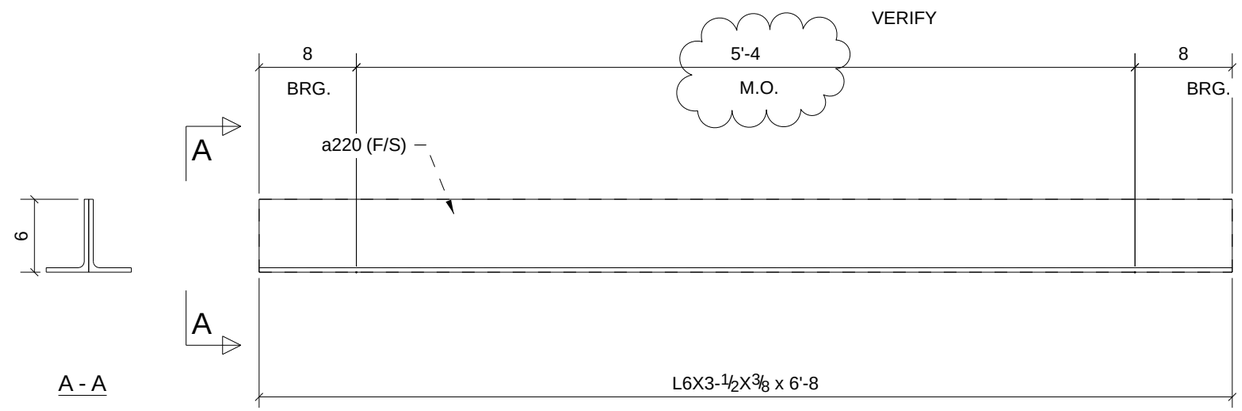

L-6 (M.O.=5'-4") LOCATION (M?) NEAR 1313

ARCH./ENG/OWNER
PLEASE VERIFY / PROVIDE
TYPE & LOCATIONS
ERECTOR / GC ~ PLEASE
VERIFY / PROVIDE
M.O. @ EACH LOCATION

REV.	DESCRIPTION	DATE	DWN	CHK
A	For Approval	7/20/10	TMc	TAN

ONE - LINTEL - 22L12

(2 ANGLES EACH LINTEL)

PHASE				
1	2	3	4	5
0	1	0	0	0

GENERAL NOTES

MATERIAL: A992 / A36
ELECTRODES: E70XX LH
REF. DRG.
HOLES: 13/16 DIA. U/N
CONN'S.: -
SURFACE PREP. AND PAINT: SSPC-SP-2 GREY PRIMER DEVOE NA-195 (U.N,)

JOB USE
SHOP
APPROVAL

DESCRIPTION: LINTEL
PROJECT NAME: Hamilton High School Phase III
LOCATION: Hamilton City School District - Hamilton
CONTRACTOR: GC Contracting

BILL OF MATERIAL

SHIP	MARK	NO PCS	DESCRIPTION	LENGTH	PIECE MARK	REMARKS
1	22L12	1	L6X3-1/2X3/8	6'-8"		SQ-2 A36 1 S/C STD PRIMER
		1	L6X3-1/2X3/8	6'-8"	a220	A36 1 S/C STD PRIMER

Avenue Fabricating Inc.
1281 Clough Pike
Batavia, OH 45103
(513) 752-1911

DRAWN BY TMc	DATE 07/20/2010		
CHKD. BY TAN	DATE		
JOB No. 10-16	DRG. No. 22L12	REV. 1	

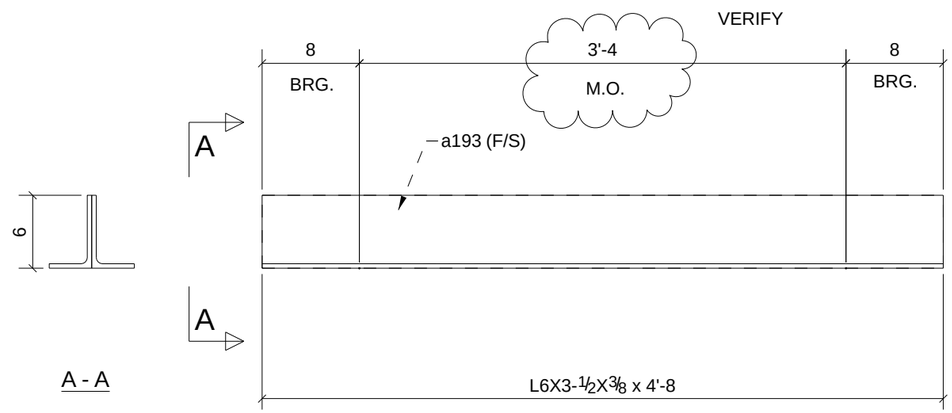

L-6 (M.O.=3'-4") LOCATION (M?) NEAR 1313

ARCH./ENG/OWNER
PLEASE VERIFY / PROVIDE
TYPE & LOCATIONS
ERECTOR / GC ~ PLEASE
VERIFY / PROVIDE
M.O. @ EACH LOCATION

REV.	DESCRIPTION	DATE	DWN	CHK
A	For Approval	7/20/10	TMc	TAN

PHASE				
1	2	3	4	5
0	1	0	0	0

ONE - LINTEL - 22L13

(2 ANGLES EACH LINTEL)

GENERAL NOTES

MATERIAL: A992 / A36
ELECTRODES: E70XX LH
REF. DRG.
HOLES: 13/16 DIA. U/N
CONN'S.: -
SURFACE PREP. AND PAINT: SSPC-SP-2 GREY PRIMER DEVOE NA-195 (U.N,)

JOB USE
SHOP
APPROVAL

DESCRIPTION: LINTEL
PROJECT NAME: Hamilton High School Phase III
LOCATION: Hamilton City School District - Hamilton
CONTRACTOR: GC Contracting

BILL OF MATERIAL

SHIP	MARK	NO PCS	DESCRIPTION	LENGTH	PIECE MARK	REMARKS
1	22L13	1	L6X3-1/2X3/8	4'-8"		SQ-2 A36 1 S/C STD PRIMER
		1	L6X3-1/2X3/8	4'-8"	a193	A36 1 S/C STD PRIMER

Avenue Fabricating Inc.
1281 Clough Pike
Batavia, OH 45103
(513) 752-1911

DRAWN BY	DATE	
TMc	07/20/2010	
CHKD. BY	DATE	
TAN		
JOB No.	DRG. No.	REV.
10-16	22L13	1

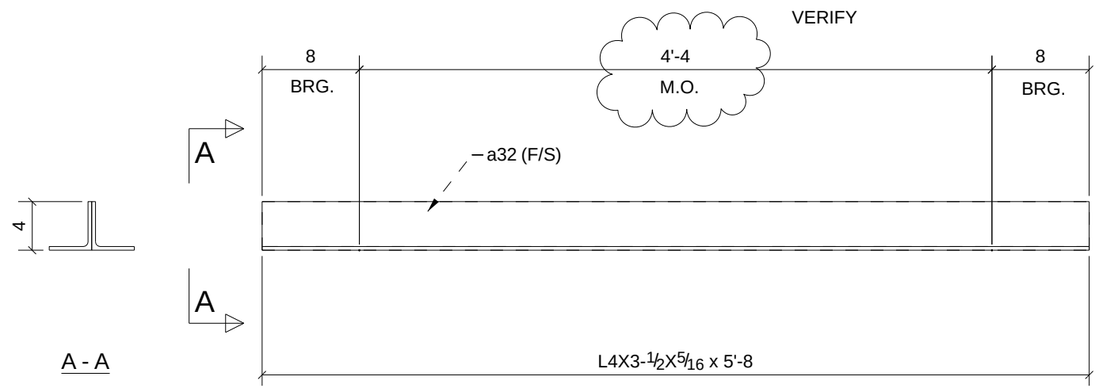

L-4 (M.O.=4'-4") LOCATION (1316C)

(1316B)

ARCH./ENG/OWNER
PLEASE VERIFY / PROVIDE
TYPE & LOCATIONS
ERECTOR / GC ~ PLEASE
VERIFY / PROVIDE
M.O. @ EACH LOCATION

REV.	DESCRIPTION	DATE	DWN	CHK
A	For Approval	7/20/10	TMc	TAN

PHASE				
1	2	3	4	5
0	2	0	0	0

2 - LINTELS - 22L14

(2 ANGLES EACH LINTEL)

GENERAL NOTES

MATERIAL: A992 / A36
ELECTRODES: E70XX LH
REF. DRG.
HOLES: 13/16 DIA. U/N
CONN'S.: -
SURFACE PREP. AND PAINT: SSPC-SP-2
GREY PRIMER DEVOE NA-195 (U.N,)

JOB USE
SHOP
APPROVAL

DESCRIPTION: LINTEL

PROJECT NAME: Hamilton High School Phase III
LOCATION: Hamilton City School District - Hamilton

CONTRACTOR: GC Contracting

BILL OF MATERIAL

SHIP	MARK	NO PCS	DESCRIPTION	LENGTH	PIECE MARK	REMARKS
2	22L14	2	L4X3-1/2X5/16	5'-8"		SQ-2 A36 1 S/C STD PRIMER
		2	L4X3-1/2X5/16	5'-8"	a32	A36 1 S/C STD PRIMER

Avenue Fabricating Inc.
1281 Clough Pike
Batavia, OH 45103
(513) 752-1911

DRAWN BY	DATE	
TMc	07/20/2010	
CHKD. BY	DATE	
TAN		
JOB No.	DRG. No.	REV.
10-16	22L14	1

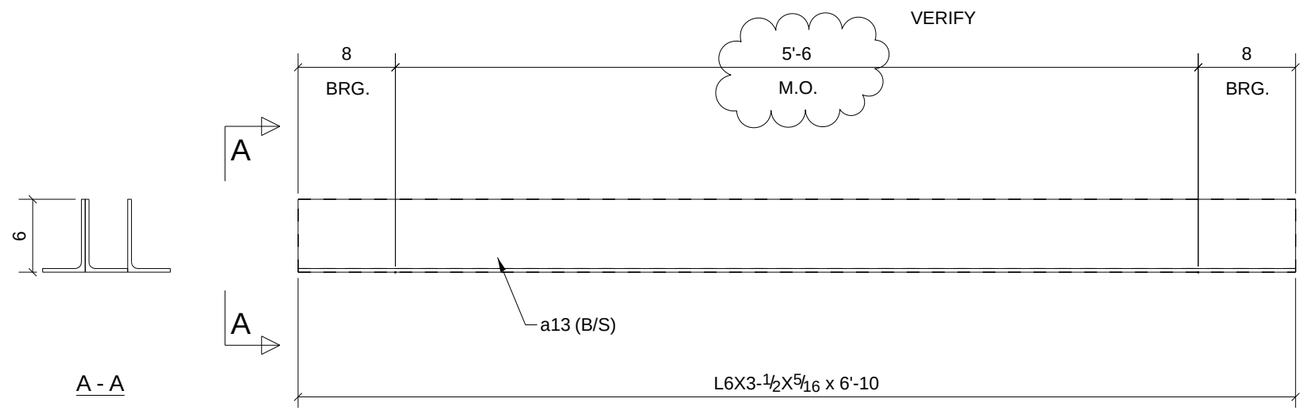

L-7 (M.O.=5'-6") LOCATION (1122)

(1101) (2X)

ARCH./ENG/OWNER
PLEASE VERIFY / PROVIDE
TYPE & LOCATIONS
ERECTOR / GC ~ PLEASE
VERIFY / PROVIDE
M.O. @ EACH LOCATION

REV.	DESCRIPTION	DATE	DWN	CHK
A	For Approval	7/20/10	TMc	TAN

3 - LINTELS - 22L15

(3 ANGLES EACH LINTEL)

PHASE				
1	2	3	4	5
0	3	0	0	0

GENERAL NOTES

MATERIAL: A992 / A36
ELECTRODES: E70XX LH
REF. DRG.
HOLES: 13/16 DIA. U/N
CONN'S.: -
SURFACE PREP. AND PAINT: SSPC-SP-2 GREY PRIMER DEVOE NA-195 (U.N,)

JOB USE
SHOP
APPROVAL

DESCRIPTION: LINTEL
PROJECT NAME: Hamilton High School Phase III
LOCATION: Hamilton City School District - Hamilton
CONTRACTOR: GC Contracting

BILL OF MATERIAL

SHIP	MARK	NO PCS	DESCRIPTION	LENGTH	PIECE MARK	REMARKS
3	22L15	3	L6X3-1/2X5/16	6'-10"		SQ-2 A36 GALVANIZED
		6	L6X3-1/2X5/16	6'-10"	a13	A36 GALVANIZED

Avenue Fabricating Inc.
1281 Clough Pike
Batavia, OH 45103
(513) 752-1911

DRAWN BY	DATE	
TMc	07/20/2010	
CHKD. BY	DATE	
TAN		
JOB No.	DRG. No.	REV.
10-16	22L15	1

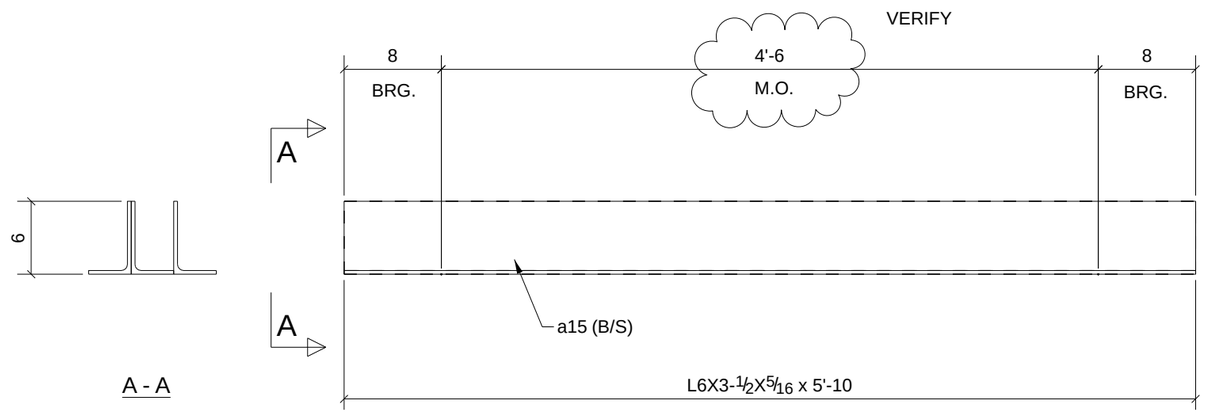

L-7 (M.O.=4'-6") LOCATION (1108) (2X)
(1106)

ARCH./ENG/OWNER
PLEASE VERIFY / PROVIDE
TYPE & LOCATIONS
ERECTOR / GC ~ PLEASE
VERIFY / PROVIDE
M.O. @ EACH LOCATION

REV.	DESCRIPTION	DATE	DWN	CHK
A	For Approval	7/20/10	TMc	TAN

PHASE				
1	2	3	4	5
0	3	0	0	0

3 - LINTELS - 22L16

(3 ANGLES EACH LINTEL)

GENERAL NOTES

MATERIAL: A992 / A36
ELECTRODES: E70XX LH
REF. DRG.
HOLES: 13/16 DIA. U/N
CONN'S.: -
SURFACE PREP. AND PAINT: SSPC-SP-2 GREY PRIMER DEVOE NA-195 (U.N,)

JOB USE
SHOP
APPROVAL

DESCRIPTION: LINTEL
PROJECT NAME: Hamilton High School Phase III
LOCATION: Hamilton City School District - Hamilton
CONTRACTOR: GC Contracting

BILL OF MATERIAL

SHIP	MARK	NO PCS	DESCRIPTION	LENGTH	PIECE MARK	REMARKS
3	22L16	3	L6X3-1/2X5/16	5'-10"		SQ-2 A36 GALVANIZED
		6	L6X3-1/2X5/16	5'-10"	a15	A36 GALVANIZED

Avenue Fabricating Inc.
1281 Clough Pike
Batavia, OH 45103
(513) 752-1911

DRAWN BY	DATE	
TMc	07/20/2010	
CHKD. BY	DATE	
TAN		
JOB No.	DRG. No.	REV.
10-16	22L16	1

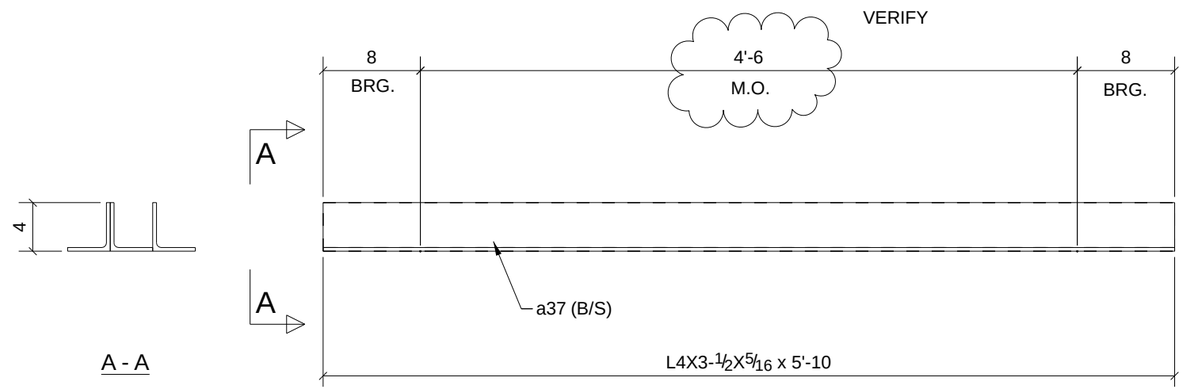

L-3 (M.O.=4'-6") LOCATION (1119)

(1116)

ARCH./ENG/OWNER
PLEASE VERIFY / PROVIDE
TYPE & LOCATIONS
ERECTOR / GC ~ PLEASE
VERIFY / PROVIDE
M.O. @ EACH LOCATION

REV.	DESCRIPTION	DATE	DWN	CHK
A	For Approval	7/20/10	TMc	TAN

PHASE				
1	2	3	4	5
0	2	0	0	0

2 - LINTELS - 22L17

(3 ANGLES EACH LINTEL)

GENERAL NOTES

MATERIAL: A992 / A36
ELECTRODES: E70XX LH
REF. DRG.
HOLES: 13/16 DIA. U/N
CONN'S.: -
SURFACE PREP. AND PAINT: SSPC-SP-2
GREY PRIMER DEVOE NA-195 (U.N,)

JOB USE
SHOP
APPROVAL

DESCRIPTION: LINTEL

PROJECT NAME: Hamilton High School Phase III
LOCATION: Hamilton City School District - Hamilton

CONTRACTOR: GC Contracting

BILL OF MATERIAL

SHIP	MARK	NO PCS	DESCRIPTION	LENGTH	PIECE MARK	REMARKS
2	22L17	2	L4X3-1/2X5/16	5'-10"		SQ-2 A36 GALVANIZED
		4	L4X3-1/2X5/16	5'-10"	a37	A36 GALVANIZED

Avenue Fabricating Inc.
1281 Clough Pike
Batavia, OH 45103
(513) 752-1911

DRAWN BY TMc	DATE 07/20/2010		
CHKD. BY TAN	DATE		
JOB No. 10-16	DRG. No. 22L17	REV. 1	

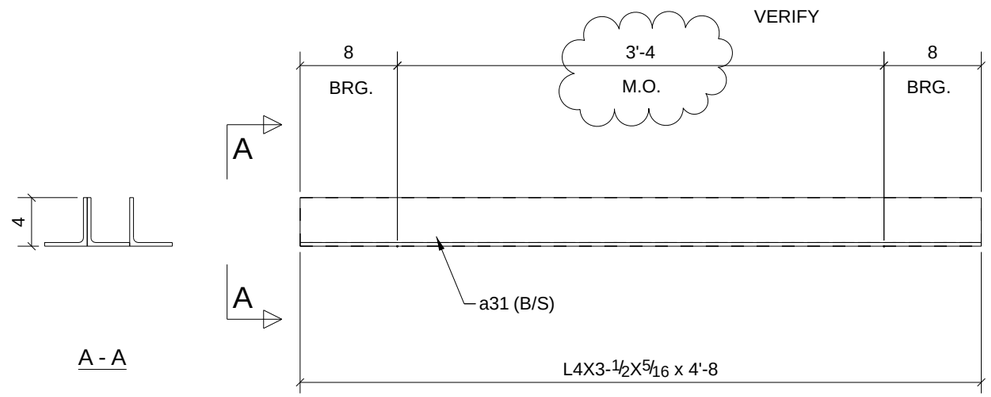

L-3 (M.O.=3'-4") LOCATION (1028B)

(1039)

ARCH./ENG/OWNER
PLEASE VERIFY / PROVIDE
TYPE & LOCATIONS
ERECTOR / GC ~ PLEASE
VERIFY / PROVIDE
M.O. @ EACH LOCATION

REV.	DESCRIPTION	DATE	DWN	CHK
A	For Approval	7/20/10	TMc	TAN

PHASE				
1	2	3	4	5
0	2	0	0	0

2 - LINTELS - 22L18

(3 ANGLES EACH LINTEL)

GENERAL NOTES

MATERIAL: A992 / A36
ELECTRODES: E70XX LH
REF. DRG.
HOLES: 13/16 DIA. U/N
CONN'S.: -
SURFACE PREP. AND PAINT: SSPC-SP-2 GREY PRIMER DEVOE NA-195 (U.N,)

JOB USE
SHOP
APPROVAL

DESCRIPTION: LINTEL
PROJECT NAME: Hamilton High School Phase III
LOCATION: Hamilton City School District - Hamilton
CONTRACTOR: GC Contracting

BILL OF MATERIAL

SHIP	MARK	NO PCS	DESCRIPTION	LENGTH	PIECE MARK	REMARKS
2	22L18	2	L4X3-1/2X5/16	4'-8"		SQ-2 A36 1 S/C STD PRIMER
		4	L4X3-1/2X5/16	4'-8"	a31	A36 1 S/C STD PRIMER

Avenue Fabricating Inc.
1281 Clough Pike
Batavia, OH 45103
(513) 752-1911

DRAWN BY	DATE	
TMc	07/20/2010	
CHKD. BY	DATE	
TAN		
JOB No.	DRG. No.	REV.
10-16	22L18	1

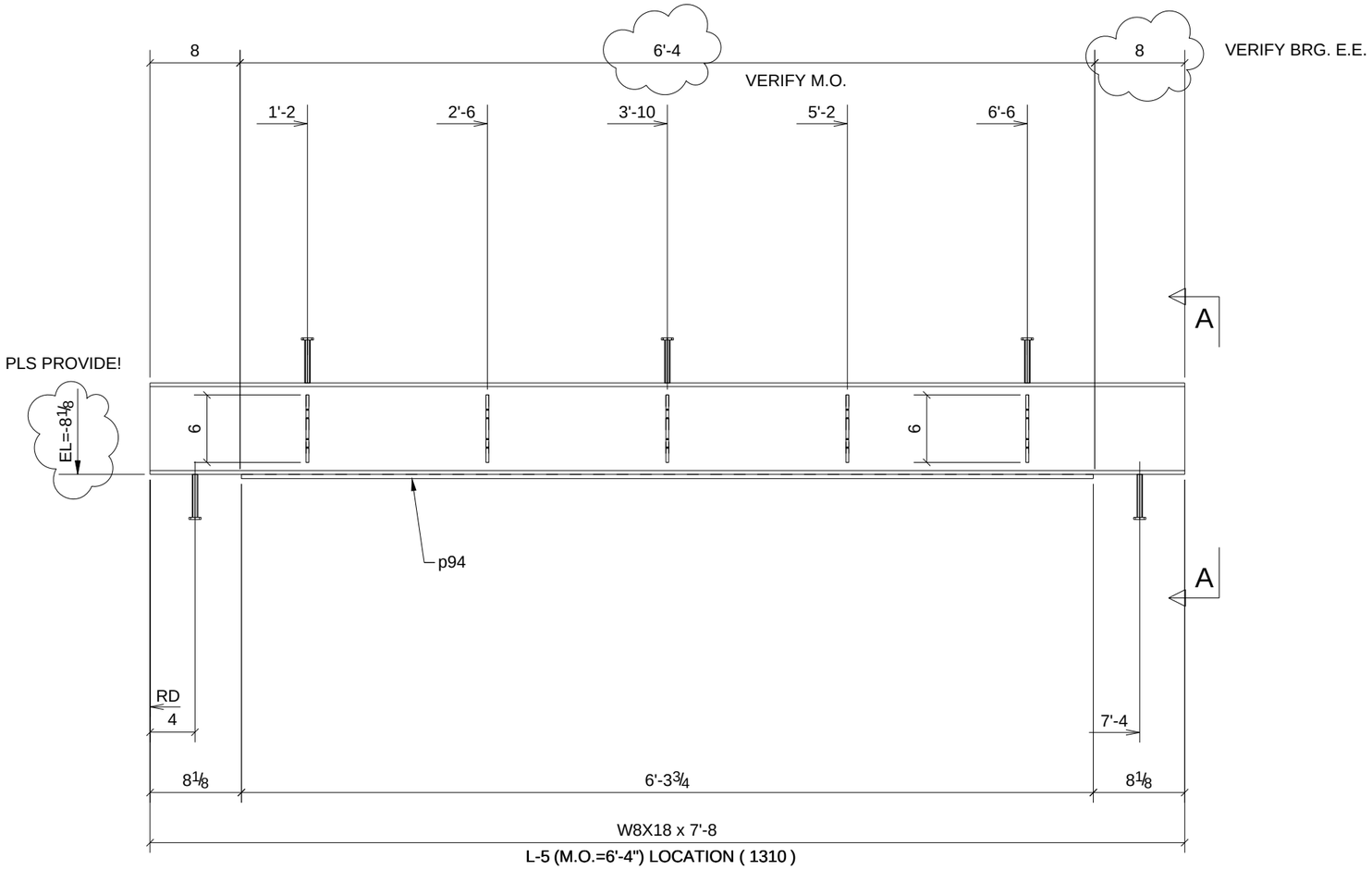

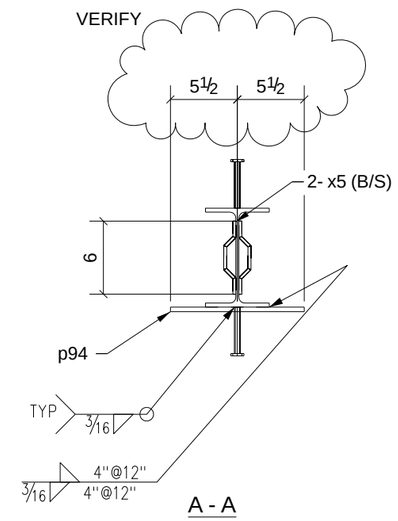

ONE - LINTEL - 22L19

PHASE				
1	2	3	4	5
0	1	0	0	0

W	8 1/8"x1/4"
F	5 1/4"x5/16"

REV.	DESCRIPTION	DATE	DWN	CHK
A	For Approval	7/20/10	TMc	TAN

GENERAL NOTES

MATERIAL: A992 / A36
ELECTRODES: E70XX LH
REF. DRG.
HOLES: 13/16 DIA. U/N
CONN'S.: -
SURFACE PREP. AND PAINT: SSPC-SP-2 GREY PRIMER DEVOE NA-195 (U.N,)

JOB USE
SHOP
APPROVAL

DESCRIPTION: LINTEL
PROJECT NAME: Hamilton High School Phase III
LOCATION: Hamilton City School District - Hamilton
CONTRACTOR: GC Contracting

BILL OF MATERIAL

SHIP	MARK	NO PCS	DESCRIPTION	LENGTH	PIECE MARK	REMARKS
1	22L19	1	W8X18	7'-8"		SQ-2 A992 GALVANIZED
		1	BAR3/8"X11"	6'-3 3/4"	p94	A36 GALVANIZED
		10	H&B #359	0'-6 3/16"	x5	A36 GALVANIZED
		5	STUD 1/2" DIA	0'-4"		

Avenue Fabricating Inc.
1281 Clough Pike
Batavia, OH 45103
(513) 752-1911

DRAWN BY TMc	DATE 07/19/2010
CHKD. BY TAN	DATE
JOB No. 10-16	DRG. No. 22L19 REV. 2

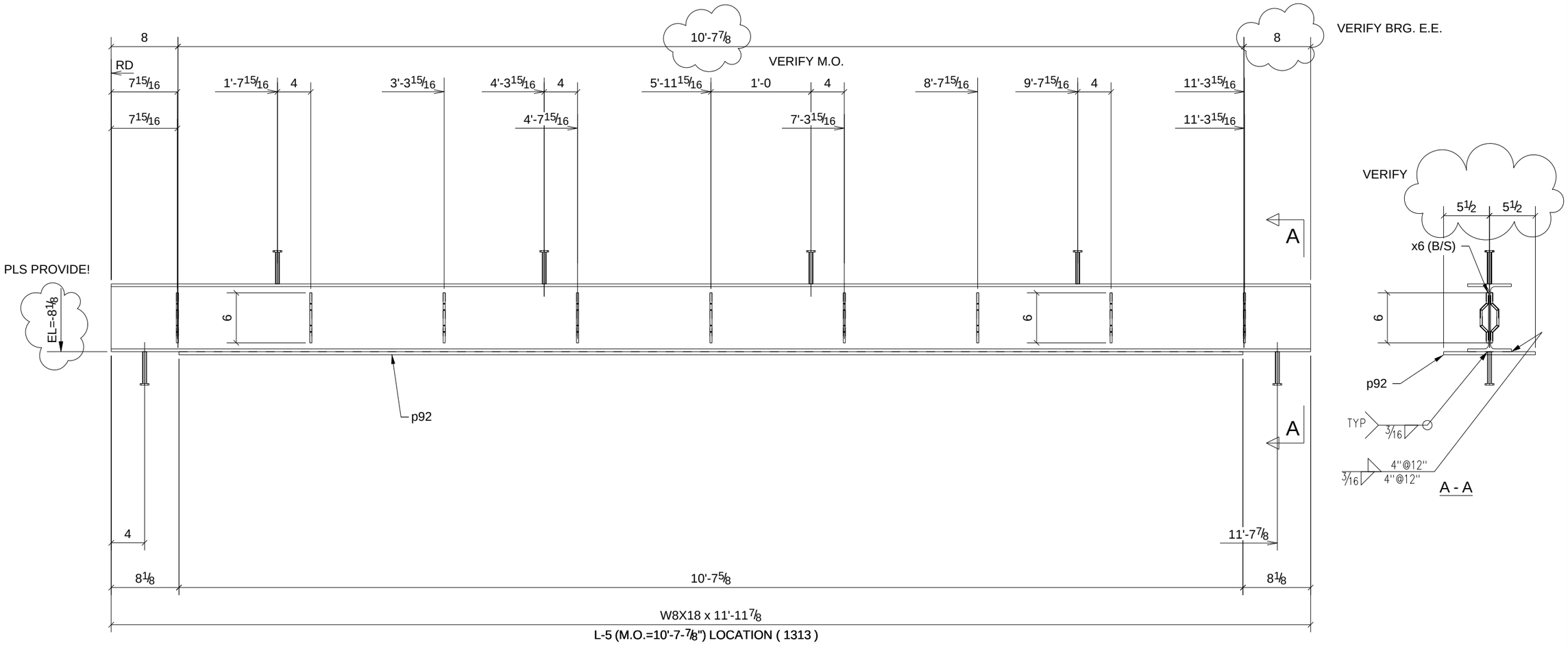

PHASE				
1	2	3	4	5
0	1	0	0	0

ONE - LINTEL - 22L2

W	8 1/8"x1/4"
F	5 1/4"x5/16"

REV.	DESCRIPTION	DATE	DWN	CHK
A	For Approval	7/20/10	TMc	TAN

GENERAL NOTES

MATERIAL: A992 / A36
ELECTRODES: E70XX LH
REF. DRG.
HOLES: 13/16 DIA. U/N
CONN'S.: -
SURFACE PREP. AND PAINT: SSPC-SP-2 GREY PRIMER DEVOE NA-195 (U.N,)

JOB USE
SHOP
APPROVAL

DESCRIPTION: LINTEL
PROJECT NAME: Hamilton High School Phase III
LOCATION: Hamilton City School District - Hamilton
CONTRACTOR: GC Contracting

BILL OF MATERIAL

SHIP	MARK	NO PCS	DESCRIPTION	LENGTH	PIECE MARK	REMARKS
1	22L2	1	W8X18	11'-11 7/8"		SQ-2 A992 GALVANIZED
		1	BAR3/8"X11"	10'-7 5/8"	p92	A36 GALVANIZED
		18	H&B #359	0'-6 3/16"	x6	A36 GALVANIZED
		6	STUD 1/2" DIA	0'-4"		

Avenue Fabricating Inc.
1281 Clough Pike
Batavia, OH 45103
(513) 752-1911

DRAWN BY	TMc
DATE	07/19/2010
CHKD. BY	TAN
DATE	
JOB No.	10-16
DRG. No.	22L2
REV.	1

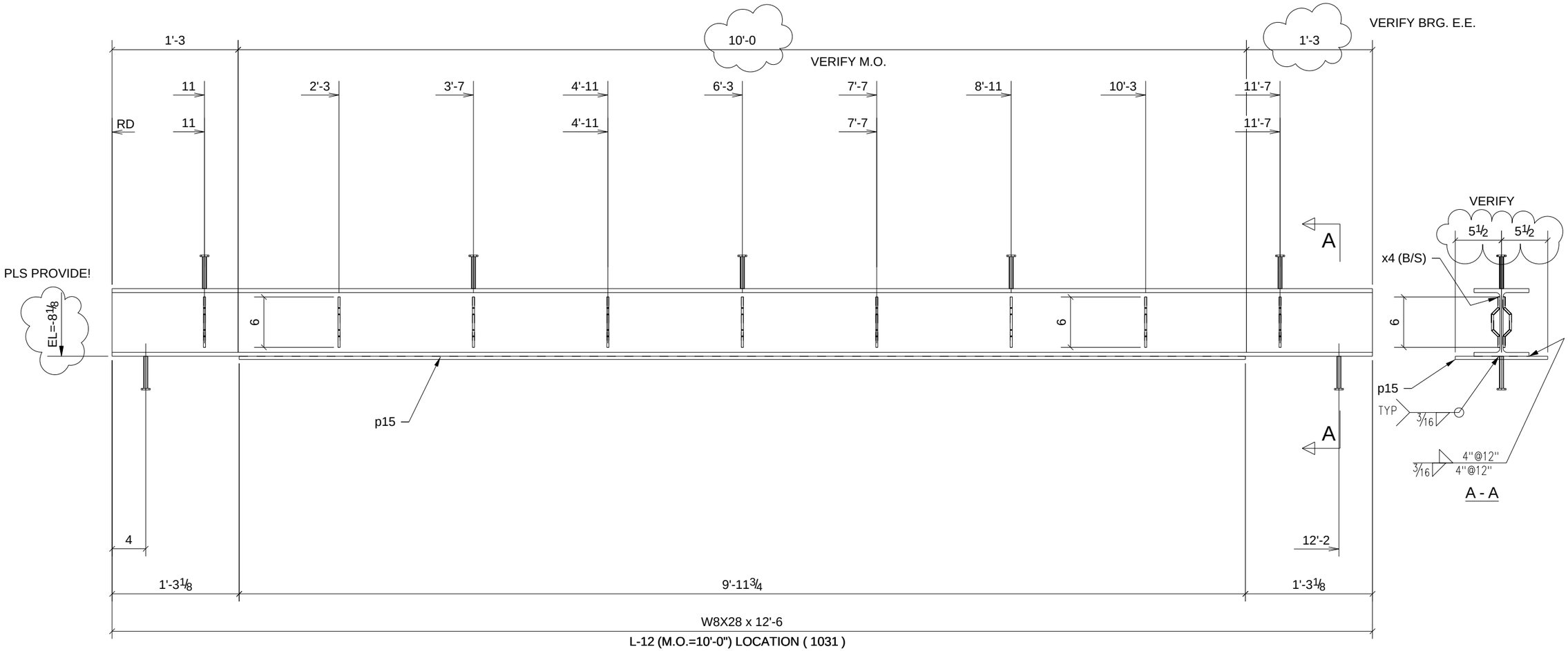

ONE - LINTEL - 22L20

PHASE				
1	2	3	4	5
0	1	0	0	0

W	8 1/16"x1/4"
F	6 9/16"x7/16"

REV.	DESCRIPTION	DATE	DWN	CHK
A	For Approval	7/20/10	TMc	TAN

GENERAL NOTES

MATERIAL: A992 / A36
ELECTRODES: E70XX LH
REF. DRG.
HOLES: 13/16 DIA. U/N
CONN'S.: -
SURFACE PREP. AND PAINT: SSPC-SP-2 GREY PRIMER DEVOE NA-195 (U.N,)

JOB USE
SHOP
APPROVAL

DESCRIPTION: LINTEL
PROJECT NAME: Hamilton High School Phase III
LOCATION: Hamilton City School District - Hamilton
CONTRACTOR: GC Contracting

BILL OF MATERIAL

SHIP	MARK	NO PCS	DESCRIPTION	LENGTH	PIECE MARK	REMARKS
1	22L20	1	W8X28	12'-6"		SQ-2 A992 1 S/C STD PRIMER
		1	BAR3/8"X11"	9'-11 3/4"	p15	A36 1 S/C STD PRIMER
		18	H&B #359	0'-6 3/16"	x4	A36 1 S/C STD PRIMER
		7	STUD 1/2" DIA	0'-4"		

Avenue Fabricating Inc.
1281 Clough Pike
Batavia, OH 45103
(513) 752-1911

DRAWN BY	DATE	
TMc	07/19/2010	
CHKD. BY	DATE	
TAN		
JOB No.	DRG. No.	REV.
10-16	22L20	1

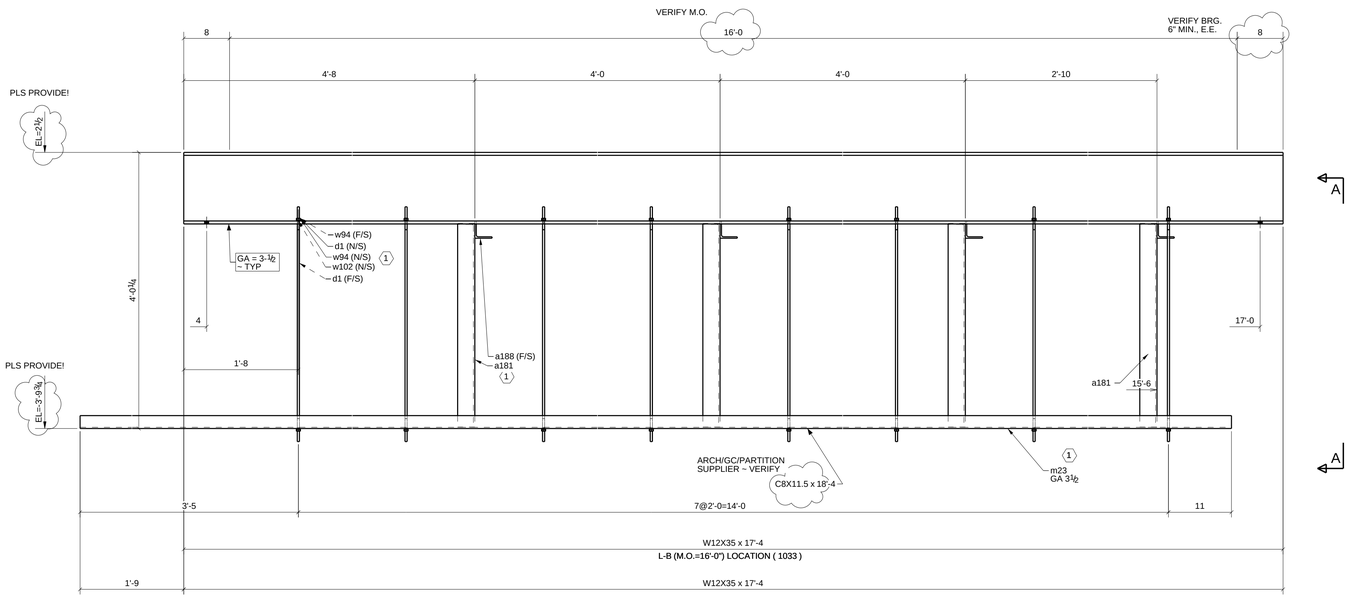

ARCH/OWNER:
PLEASE PROVIDE ADDITIONAL
MEMBER &/OR HOLE REQUIREMENTS
FOR PARTITION SUPPORT & ELEVATION.

ERECTOR:
FIELD VERIFY EXISTING CONDITIONS
THAT BRACING IS ENOUGH MATERIAL
TO ATTACH TO EXIST. JOISTS- REF: 9/S406

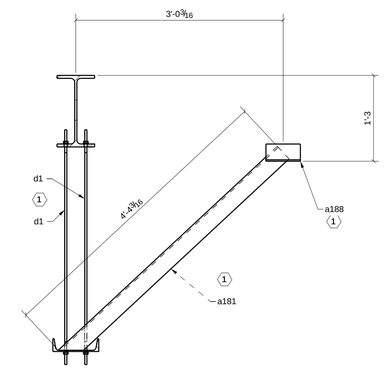

A - A

PHASE				
1	2	3	4	5
0	1	0	0	0

ONE - LINTEL - 22L27

W	12 1/2" x 1/4"
F	6 9/16" x 1/2"

1 SHOP NOTE: MARK WITH SHIP & PC MK. & SHIP LOOSE WITH BEAM

BILL OF MATERIAL

SHIP	MARK	NO PCS	DESCRIPTION	LENGTH	PIECE MARK	REMARKS
1	22L27	1	W12X35	17'-4"		SQ-2 A992 1 S/C STD PRIMER
		4	L3X3X1/4	4'-4 3/16"	a181	A36 1 S/C STD PRIMER
		4	L3X3X1/4	0'-6"	a188	A36 1 S/C STD PRIMER
		16	RB3/8"	3'-5"	d1	A36 1 S/C STD PRIMER
		1	C8X11.5	18'-4"	m23	A992 -
		16	5/16"X1/8"	0'-0 1/8"	w93	A36
		8	5/16"X1/8"	0'-0 1/8"	w102	A36 1 S/C STD PRIMER
		16	3/8_HEAVY_HEX_NUT			
		16	3/8_HEAVY_HEX_NUT			

REV.	DESCRIPTION	DATE	DWN	CHK
A	For Approval	7/20/10	TMc	TAN

GENERAL NOTES

MATERIAL: A992 / A36
ELECTRODES: E70XX LH
REF. DRG.
HOLES: 13/16 DIA. U/N
CONN'S.: -
SURFACE PREP. AND PAINT: SSPC-SP-2 GREY PRIMER DEVOE NA-195 (U.N,)

JOB USE
SHOP
APPROVAL

DESCRIPTION: LINTEL
PROJECT NAME: Hamilton High School Phase III
LOCATION: Hamilton City School District - Hamilton
CONTRACTOR: GC Contracting

Avenue Fabricating Inc.
1281 Clough Pike
Batavia, OH 45103
(513) 752-1911

DRAWN BY	DATE	
TMc	07/20/2010	
CHKD. BY	DATE	
TAN		
JOB No.	DRG. No.	REV.
10-16	22L27	1

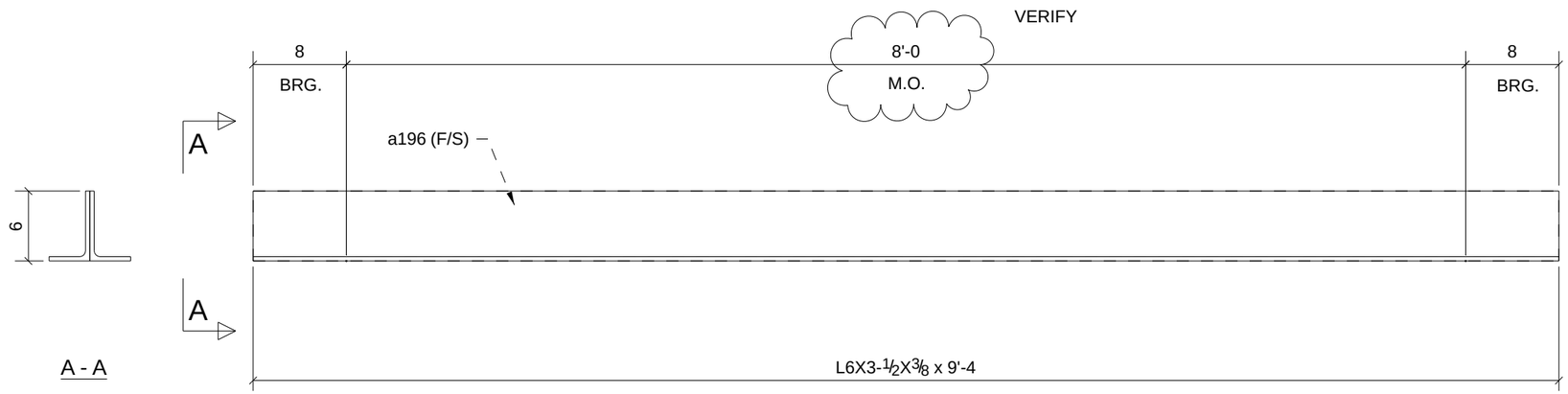

L-6 LOCATION (1207)

ARCH./ENG/OWNER
PLEASE VERIFY / PROVIDE
TYPE & LOCATIONS
ERECTOR / GC ~ PLEASE
VERIFY / PROVIDE
M.O. @ EACH LOCATION

REV.	DESCRIPTION	DATE	DWN	CHK
A	For Approval	7/20/10	TMc	TAN

PHASE				
1	2	3	4	5
0	1	0	0	0

ONE - LINTEL - 22L29

(3 ANGLES EACH LINTEL)

GENERAL NOTES

MATERIAL: A992 / A36
ELECTRODES: E70XX LH
REF. DRG.
HOLES: 13/16 DIA. U/N
CONN'S.: -
SURFACE PREP. AND PAINT: SSPC-SP-2 GREY PRIMER DEVOE NA-195 (U.N,)

JOB USE
SHOP
APPROVAL

DESCRIPTION: LINTEL
PROJECT NAME: Hamilton High School Phase III
LOCATION: Hamilton City School District - Hamilton
CONTRACTOR: GC Contracting

BILL OF MATERIAL

SHIP	MARK	NO PCS	DESCRIPTION	LENGTH	PIECE MARK	REMARKS
1	22L29	1	L6X3-1/2X3/8	9'-4"		SQ-2 A36 1 S/C STD PRIMER
		1	L6X3-1/2X3/8	9'-4"	a196	A36 1 S/C STD PRIMER

Avenue Fabricating Inc.
1281 Clough Pike
Batavia, OH 45103
(513) 752-1911

DRAWN BY	DATE	
TMc	07/20/2010	
CHKD. BY	DATE	
TAN		
JOB No.	DRG. No.	REV.
10-16	22L29	1

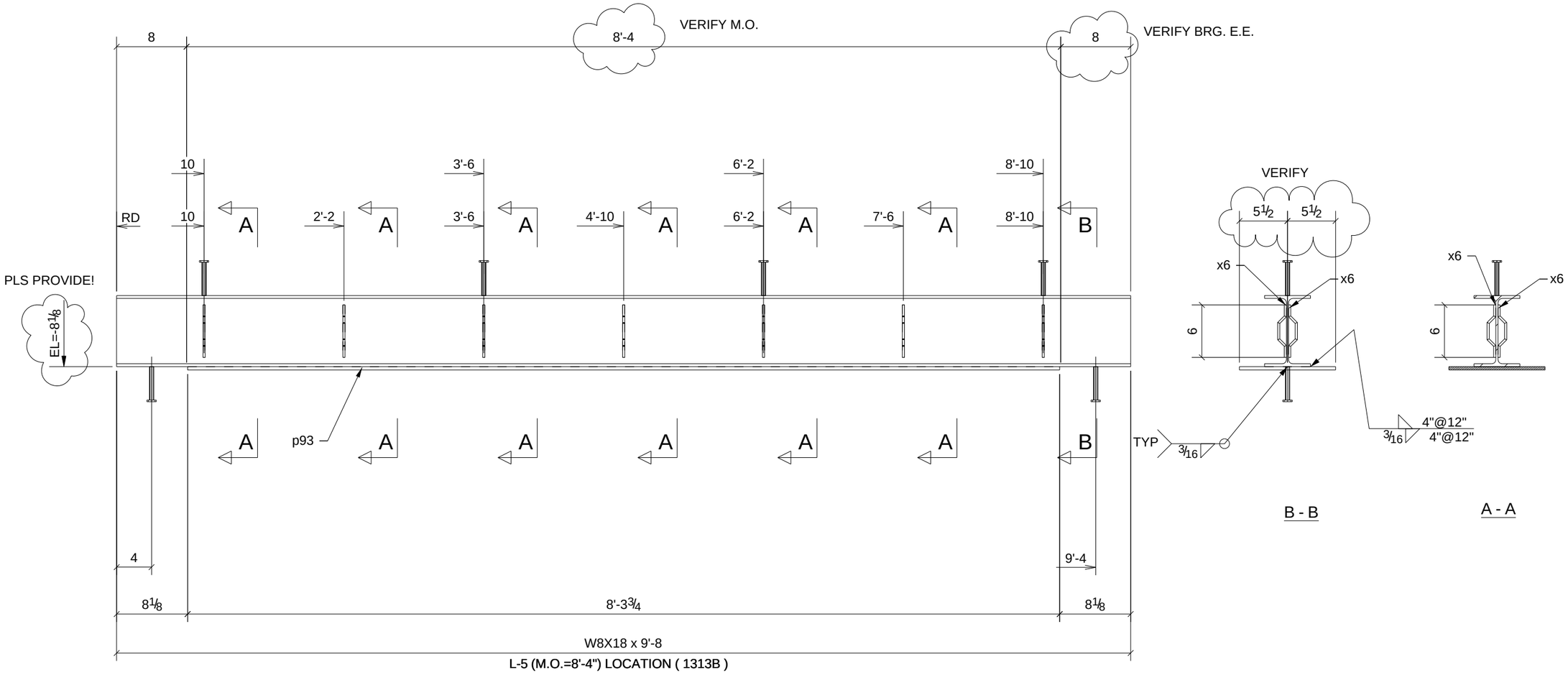

ONE - LINTEL - 22L3

PHASE				
1	2	3	4	5
0	1	0	0	0

W	8 1/8" x 1/4"
F	5 1/4" x 5/16"

REV.	DESCRIPTION	DATE	DWN	CHK
A	For Approval	7/20/10	TMc	TAN

GENERAL NOTES

MATERIAL: A992 / A36
ELECTRODES: E70XX LH
REF. DRG.
HOLES: 13/16 DIA. U/N
CONN'S.: -
SURFACE PREP. AND PAINT: SSPC-SP-2 GREY PRIMER DEVOE NA-195 (U.N,)

JOB USE
SHOP
APPROVAL

DESCRIPTION: LINTEL
PROJECT NAME: Hamilton High School Phase III
LOCATION: Hamilton City School District - Hamilton
CONTRACTOR: GC Contracting

BILL OF MATERIAL

SHIP	MARK	NO PCS	DESCRIPTION	LENGTH	PIECE MARK	REMARKS
1	22L3	1	W8X18	9'-8"		SQ-2 A992 GALVANIZED
		1	BAR3/8"X11"	8'-3 3/4"	p93	A36 GALVANIZED
		14	H&B #359	0'-6 3/16"	x6	A36 GALVANIZED
		6	STUD 1/2" DIA	0'-4"		

Avenue Fabricating Inc.
1281 Clough Pike
Batavia, OH 45103
(513) 752-1911

DRAWN BY	DATE	
TMc	07/19/2010	
CHKD. BY	DATE	
TAN		
JOB No.	DRG. No.	REV.
10-16	22L3	1

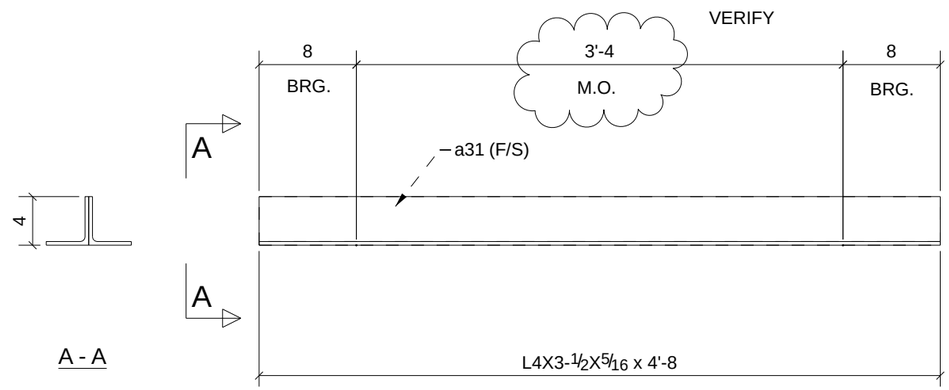

L-4 (M.O.=3'-4") LOCATION (1312)

(1318)
(1304)
(1306)
(1307)
(1316A)
(1317)
(1319A)
(1320)
(1321A)
(1327)

ARCH./ENG/OWNER
PLEASE VERIFY / PROVIDE
TYPE & LOCATIONS
ERECTOR / GC ~ PLEASE
VERIFY / PROVIDE
M.O. @ EACH LOCATION

REV.	DESCRIPTION	DATE	DWN	CHK
A	For Approval	7/20/10	TMc	TAN

PHASE				
1	2	3	4	5
0	11	0	0	0

11 - LINTELS - 22L4

(2 ANGLES EACH LINTEL)

GENERAL NOTES

MATERIAL: A992 / A36
ELECTRODES: E70XX LH
REF. DRG.
HOLES: 13/16 DIA. U/N
CONN'S.: -
SURFACE PREP. AND PAINT: SSPC-SP-2 GREY PRIMER DEVOE NA-195 (U.N,)

JOB USE
SHOP
APPROVAL

DESCRIPTION: LINTEL
PROJECT NAME: Hamilton High School Phase III
LOCATION: Hamilton City School District - Hamilton
CONTRACTOR: GC Contracting

BILL OF MATERIAL

SHIP	MARK	NO PCS	DESCRIPTION	LENGTH	PIECE MARK	REMARKS
11	22L4	11	L4X3-1/2X5/16	4'-8"		SQ-2 A36 1 S/C STD PRIMER
		11	L4X3-1/2X5/16	4'-8"	a31	A36 1 S/C STD PRIMER

Avenue Fabricating Inc.
1281 Clough Pike
Batavia, OH 45103
(513) 752-1911

DRAWN BY	DATE	
TMc	07/20/2010	
CHKD. BY	DATE	
TAN		
JOB No.	DRG. No.	REV.
10-16	22L4	1

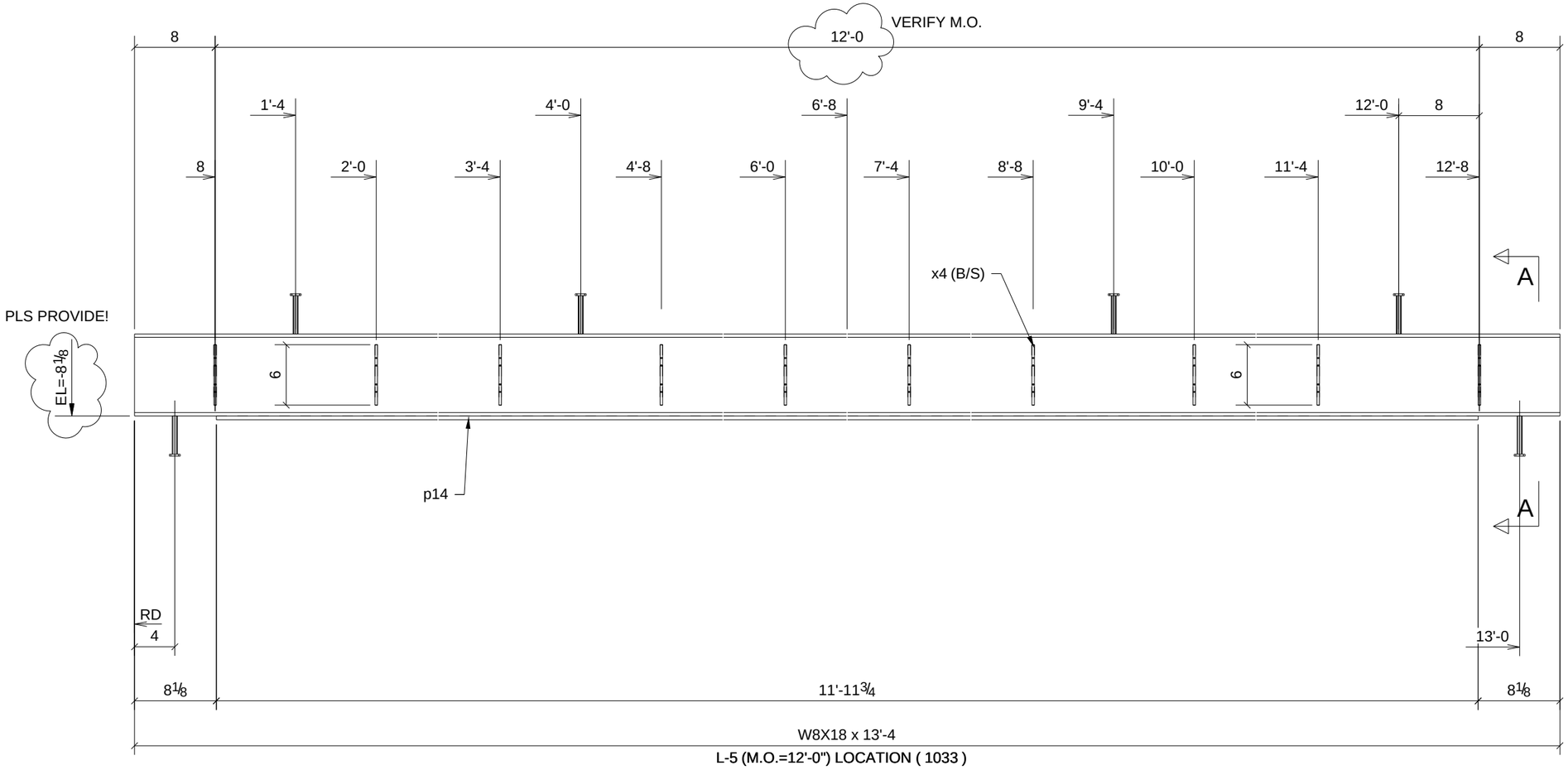

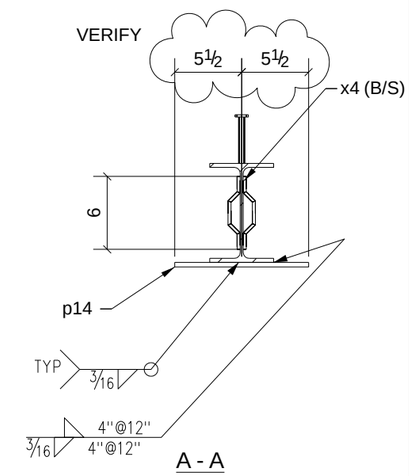

PHASE				
1	2	3	4	5
0	1	0	0	0

ONE - LINTEL - 22L5

W	8 1/8"x1/4"
F	5 1/4"x5/16"

REV.	DESCRIPTION	DATE	DWN	CHK
A	For Approval	7/20/10	TMc	TAN

GENERAL NOTES

MATERIAL: A992 / A36
ELECTRODES: E70XX LH
REF. DRG.
HOLES: 13/16 DIA. U/N
CONN'S.: -
SURFACE PREP. AND PAINT: SSPC-SP-2 GREY PRIMER DEVOE NA-195 (U.N,)

JOB USE
SHOP
APPROVAL

DESCRIPTION: LINTEL
PROJECT NAME: Hamilton High School Phase III
LOCATION: Hamilton City School District - Hamilton
CONTRACTOR: GC Contracting

BILL OF MATERIAL

SHIP	MARK	NO PCS	DESCRIPTION	LENGTH	PIECE MARK	REMARKS
1	22L5	1	W8X18	13'-4"		SQ-2 A992 1 S/C STD PRIMER
		1	BAR3/8"X11"	11'-11 3/4"	p14	A36 1 S/C STD PRIMER
		20	H&B #359	0'-6 3/16"	x4	A36 1 S/C STD PRIMER
		7	STUD 1/2" DIA	0'-4"		

Avenue Fabricating Inc.
1281 Clough Pike
Batavia, OH 45103
(513) 752-1911

DRAWN BY TMc	DATE 07/19/2010		
CHKD. BY TAN	DATE		
JOB No. 10-16	DRG. No. 22L5	REV. 1	

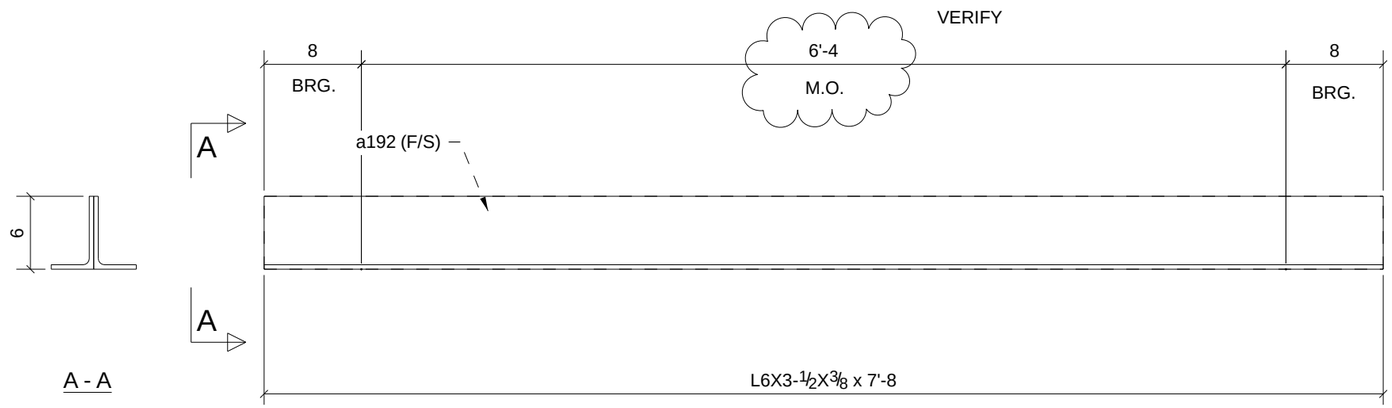

L-6 (M.O.=6'-4") LOCATION (1313A)
(1026)
(1028C)

ARCH./ENG/OWNER
PLEASE VERIFY / PROVIDE
TYPE & LOCATIONS
ERECTOR / GC ~ PLEASE
VERIFY / PROVIDE
M.O. @ EACH LOCATION

REV.	DESCRIPTION	DATE	DWN	CHK
A	For Approval	7/20/10	TMc	TAN

PHASE				
1	2	3	4	5
0	3	0	0	0

3 - LINTELS - 22L6

(3 ANGLES EACH LINTEL)

GENERAL NOTES

MATERIAL: A992 / A36
ELECTRODES: E70XX LH
REF. DRG.
HOLES: 13/16 DIA. U/N
CONN'S.: -
SURFACE PREP. AND PAINT: SSPC-SP-2
GREY PRIMER DEVOE NA-195 (U.N,)

JOB USE
SHOP
APPROVAL

DESCRIPTION: LINTEL
PROJECT NAME: Hamilton High School Phase III
LOCATION: Hamilton City School District - Hamilton
CONTRACTOR: GC Contracting

BILL OF MATERIAL

SHIP	MARK	NO PCS	DESCRIPTION	LENGTH	PIECE MARK	REMARKS
3	22L6	3	L6X3-1/2X3/8	7'-8"		SQ-2 A36 1 S/C STD PRIMER
		3	L6X3-1/2X3/8	7'-8"	a192	A36 1 S/C STD PRIMER

Avenue Fabricating Inc.
1281 Clough Pike
Batavia, OH 45103
(513) 752-1911

DRAWN BY	DATE
TMc	07/20/2010
CHKD. BY	DATE
TAN	
JOB No.	DRG. No. / REV.
10-16	22L6 / 1

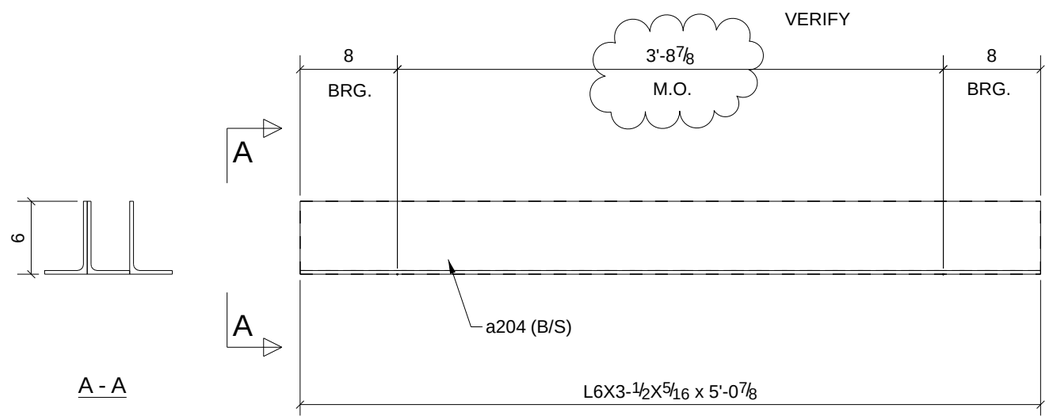

L-7 (M.O.=3'-8-7/8") LOCATION (1313)

ARCH./ENG/OWNER
PLEASE VERIFY / PROVIDE
TYPE & LOCATIONS
ERECTOR / GC ~ PLEASE
VERIFY / PROVIDE
M.O. @ EACH LOCATION

REV.	DESCRIPTION	DATE	DWN	CHK
A	For Approval	7/20/10	TMc	TAN

PHASE				
1	2	3	4	5
0	1	0	0	0

ONE - LINTEL - 22L7

(3 ANGLES EACH LINTEL)

GALVANIZED?
APPROVER PLEASE VERIFY

BILL OF MATERIAL

SHIP	MARK	NO PCS	DESCRIPTION	LENGTH	PIECE MARK	REMARKS
1	22L7	1	L6X3-1/2X5/16	5'-0 7/8"		SQ-2 A36 1 S/C STD PRIMER
		2	L6X3-1/2X5/16	5'-0 7/8"	a204	A36 1 S/C STD PRIMER

GENERAL NOTES

MATERIAL: A992 / A36
ELECTRODES: E70XX LH
REF. DRG.
HOLES: 13/16 DIA. U/N
CONN'S.: -
SURFACE PREP. AND PAINT: SSPC-SP-2 GREY PRIMER DEVOE NA-195 (U.N,)

JOB USE
SHOP
APPROVAL

DESCRIPTION: LINTEL
PROJECT NAME: Hamilton High School Phase III
LOCATION: Hamilton City School District - Hamilton
CONTRACTOR: GC Contracting

Avenue Fabricating Inc.
1281 Clough Pike
Batavia, OH 45103
(513) 752-1911

DRAWN BY	DATE	
TMc	07/20/2010	
CHKD. BY	DATE	
TAN		
JOB No.	DRG. No.	REV.
10-16	22L7	1

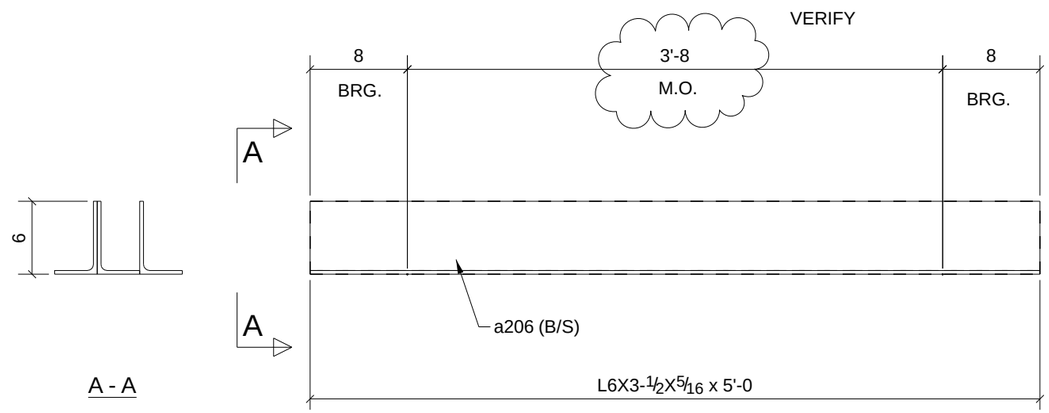

L-7 (M.O.=3'-4") LOCATION (1322)
(1325)

ARCH./ENG/OWNER
PLEASE VERIFY / PROVIDE
TYPE & LOCATIONS
ERECTOR / GC ~ PLEASE
VERIFY / PROVIDE
M.O. @ EACH LOCATION

REV.	DESCRIPTION	DATE	DWN	CHK
A	For Approval	7/20/10	TMc	TAN

PHASE				
1	2	3	4	5
0	2	0	0	0

2 - LINTELS - 22L8

(3 ANGLES EACH LINTEL)

GENERAL NOTES

MATERIAL: A992 / A36
ELECTRODES: E70XX LH
REF. DRG.
HOLES: 13/16 DIA. U/N
CONN'S.: -
SURFACE PREP. AND PAINT: SSPC-SP-2 GREY PRIMER DEVOE NA-195 (U.N,)

JOB USE
SHOP
APPROVAL

DESCRIPTION: LINTEL
PROJECT NAME: Hamilton High School Phase III
LOCATION: Hamilton City School District - Hamilton
CONTRACTOR: GC Contracting

BILL OF MATERIAL

SHIP	MARK	NO PCS	DESCRIPTION	LENGTH	PIECE MARK	REMARKS
2	22L8	2	L6X3-1/2X5/16	5'-0"		SQ-2 A36 1 S/C STD PRIMER
		4	L6X3-1/2X5/16	5'-0"	a206	A36 1 S/C STD PRIMER

Avenue Fabricating Inc.
1281 Clough Pike
Batavia, OH 45103
(513) 752-1911

DRAWN BY	DATE	
TMc	07/20/2010	
CHKD. BY	DATE	
TAN		
JOB No.	DRG. No.	REV.
10-16	22L8	1

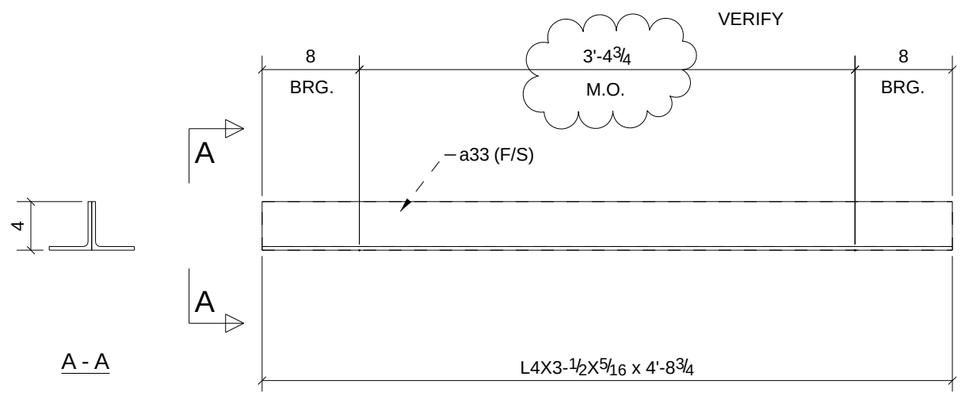

L-4 (M.O.=3'-4-3/4") LOCATION (1027-DF)

ARCH./ENG/OWNER
PLEASE VERIFY / PROVIDE
TYPE & LOCATIONS
ERECTOR / GC ~ PLEASE
VERIFY / PROVIDE
M.O. @ EACH LOCATION

REV.	DESCRIPTION	DATE	DWN	CHK
A	For Approval	7/20/10	TMc	TAN

PHASE				
1	2	3	4	5
0	1	0	0	0

ONE - LINTEL - 22L9

(2 ANGLES EACH LINTEL)

GENERAL NOTES

MATERIAL: A992 / A36
ELECTRODES: E70XX LH
REF. DRG.
HOLES: 13/16 DIA. U/N
CONN'S.: -
SURFACE PREP. AND PAINT: SSPC-SP-2 GREY PRIMER DEVOE NA-195 (U.N,)

JOB USE
SHOP
APPROVAL

DESCRIPTION: LINTEL
PROJECT NAME: Hamilton High School Phase III
LOCATION: Hamilton City School District - Hamilton
CONTRACTOR: GC Contracting

BILL OF MATERIAL

SHIP	MARK	NO PCS	DESCRIPTION	LENGTH	PIECE MARK	REMARKS
1	22L9	1	L4X3-1/2X5/16	4'-8 3/4"		SQ-2 A36 1 S/C STD PRIMER
		1	L4X3-1/2X5/16	4'-8 3/4"	a33	A36 1 S/C STD PRIMER

Avenue Fabricating Inc.
1281 Clough Pike
Batavia, OH 45103
(513) 752-1911

DRAWN BY	DATE	
TMc	07/20/2010	
CHKD. BY	DATE	
TAN		
JOB No.	DRG. No.	REV.
10-16	22L9	1

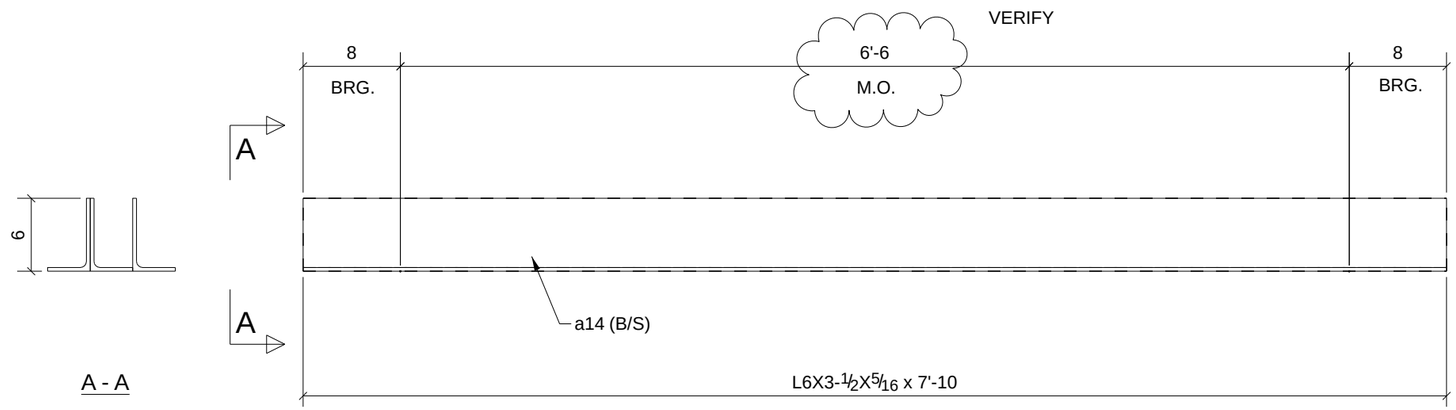

L-7 (M.O.=6'-6") LOCATION (1161) (2X)
(1156)
(1155)
(1151)

ARCH./ENG/OWNER
PLEASE VERIFY / PROVIDE
TYPE & LOCATIONS
ERECTOR / GC ~ PLEASE
VERIFY / PROVIDE
M.O. @ EACH LOCATION

PHASE				
1	2	3	4	5
0	0	5	0	0

5 - LINTELS - 32L1

(3 ANGLES EACH LINTEL)

REV.	DESCRIPTION	DATE	DWN	CHK
A	For Approval	7/20/10	TMc	TAN

GENERAL NOTES

MATERIAL: A992 / A36
ELECTRODES: E70XX LH
REF. DRG.
HOLES: 13/16 DIA. U/N
CONN'S.: -
SURFACE PREP. AND PAINT: SSPC-SP-2 GREY PRIMER DEVOE NA-195 (U.N,)

JOB USE
SHOP
APPROVAL

DESCRIPTION: LINTEL
PROJECT NAME: Hamilton High School Phase III
LOCATION: Hamilton City School District - Hamilton
CONTRACTOR: GC Contracting

BILL OF MATERIAL

SHIP	MARK	NO PCS	DESCRIPTION	LENGTH	PIECE MARK	REMARKS
5	32L1	5	L6X3-1/2X5/16	7'-10"		SQ-2 A36 GALVANIZED
		10	L6X3-1/2X5/16	7'-10"	a14	A36 GALVANIZED

Avenue Fabricating Inc.
1281 Clough Pike
Batavia, OH 45103
(513) 752-1911

DRAWN BY	DATE	
TMc	07/20/2010	
CHKD. BY	DATE	
TAN		
JOB No.	DRG. No.	REV.
10-16	32L1	1

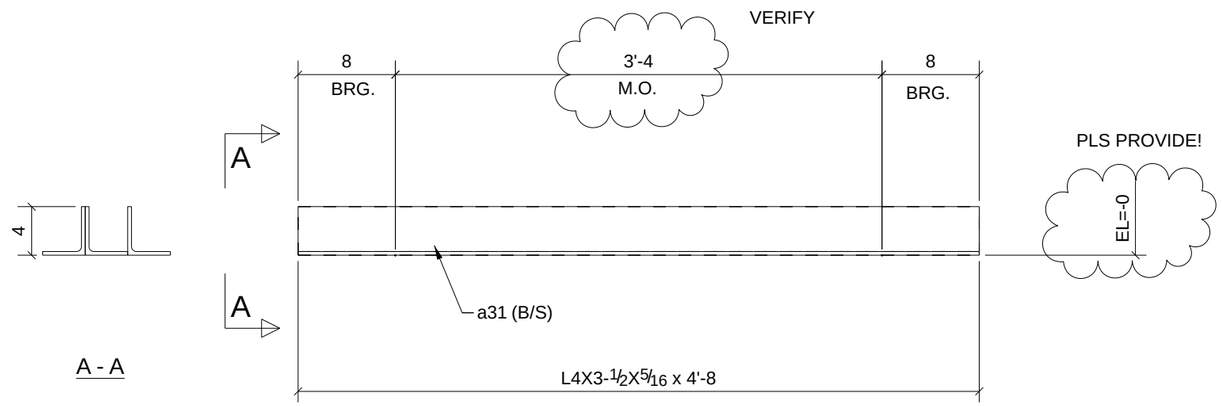

L-3 (M.O.=3'-4") LOCATION (2136)

ARCH./ENG/OWNER
PLEASE VERIFY / PROVIDE
TYPE & LOCATIONS
ERECTOR / GC ~ PLEASE
VERIFY / PROVIDE
M.O. @ EACH LOCATION

REV.	DESCRIPTION	DATE	DWN	CHK
A	For Approval	7/23/10	TMc	TAN

PHASE				
1	2	3	4	5
0	0	1	0	0

ONE - LINTEL - 32L10

(3 ANGLES EACH LINTEL)

GENERAL NOTES

MATERIAL: A992 / A36
ELECTRODES: E70XX LH
REF. DRG.
HOLES: 13/16 DIA. U/N
CONN'S.: -
SURFACE PREP. AND PAINT: SSPC-SP-2 GREY PRIMER DEVOE NA-195 (U.N,)

JOB USE
SHOP
APPROVAL

DESCRIPTION: LINTEL
PROJECT NAME: Hamilton High School Phase III
LOCATION: Hamilton City School District - Hamilton
CONTRACTOR: GC Contracting

BILL OF MATERIAL

SHIP	MARK	NO PCS	DESCRIPTION	LENGTH	PIECE MARK	REMARKS
1	32L10	1	L4X3-1/2X5/16	4'-8"		SQ-2 A36 1 S/C STD PRIMER
		2	L4X3-1/2X5/16	4'-8"	a31	A36 1 S/C STD PRIMER

Avenue Fabricating Inc.
1281 Clough Pike
Batavia, OH 45103
(513) 752-1911

DRAWN BY	DATE	
TMc	07/23/2010	
CHKD. BY	DATE	
TAN		
JOB No.	DRG. No.	REV.
10-16	32L10	1

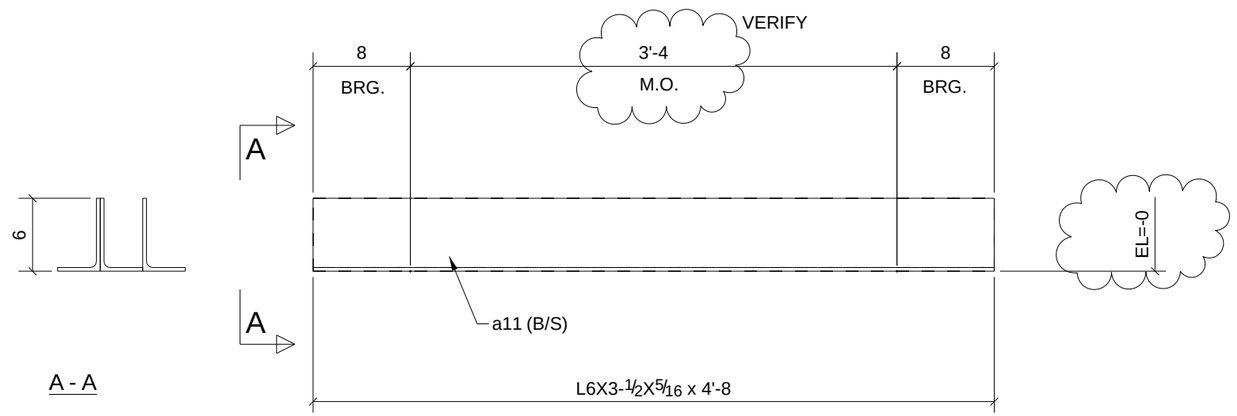

L-7 (M.O.=3'-4") LOCATION (2136)

ARCH./ENG/OWNER
PLEASE VERIFY / PROVIDE
TYPE & LOCATIONS
ERECTOR / GC ~ PLEASE
VERIFY / PROVIDE
M.O. @ EACH LOCATION

REV.	DESCRIPTION	DATE	DWN	CHK
A	For Approval	7/23/10	TMc	TAN

PHASE				
1	2	3	4	5
0	0	1	0	0

ONE - LINTEL - 32L11

(3 ANGLES EACH LINTEL)

GENERAL NOTES

MATERIAL: A992 / A36
ELECTRODES: E70XX LH
REF. DRG.
HOLES: 13/16 DIA. U/N
CONN'S.: -
SURFACE PREP. AND PAINT: SSPC-SP-2 GREY PRIMER DEVOE NA-195 (U.N,)

JOB USE
SHOP
APPROVAL

DESCRIPTION: LINTEL
PROJECT NAME: Hamilton High School Phase III
LOCATION: Hamilton City School District - Hamilton
CONTRACTOR: GC Contracting

BILL OF MATERIAL

SHIP	MARK	NO PCS	DESCRIPTION	LENGTH	PIECE MARK	REMARKS
1	32L11	1	L6X3-1/2X5/16	4'-8"		SQ-2 A36 1 S/C STD PRIMER
		2	L6X3-1/2X5/16	4'-8"	a11	A36 1 S/C STD PRIMER

Avenue Fabricating Inc.
1281 Clough Pike
Batavia, OH 45103
(513) 752-1911

DRAWN BY TMc	DATE 07/23/2010		
CHKD. BY TAN	DATE		
JOB No. 10-16	DRG. No. 32L11	REV. 1	

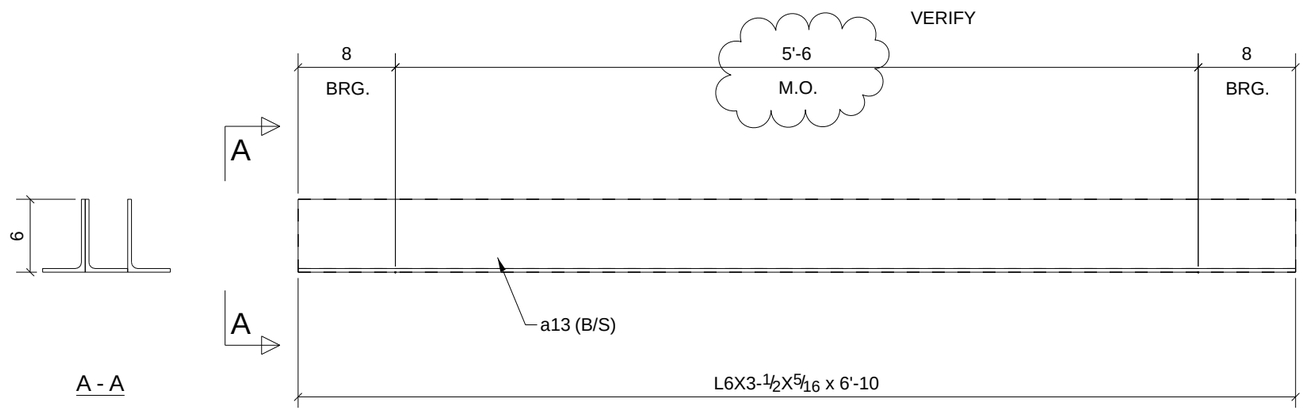

L-7 (M.O.=5'-6") LOCATION (2127)

ARCH./ENG/OWNER
PLEASE VERIFY / PROVIDE
TYPE & LOCATIONS
ERECTOR / GC ~ PLEASE
VERIFY / PROVIDE
M.O. @ EACH LOCATION

REV.	DESCRIPTION	DATE	DWN	CHK
A	For Approval	7/23/10	TMc	TAN

ONE - LINTEL - 32L12

(3 ANGLES EACH LINTEL)

PHASE				
1	2	3	4	5
0	0	1	0	0

GENERAL NOTES

MATERIAL: A992 / A36
ELECTRODES: E70XX LH
REF. DRG.
HOLES: 13/16 DIA. U/N
CONN'S.: -
SURFACE PREP. AND PAINT: SSPC-SP-2 GREY PRIMER DEVOE NA-195 (U.N,)

JOB USE
SHOP
APPROVAL

DESCRIPTION: LINTEL
PROJECT NAME: Hamilton High School Phase III
LOCATION: Hamilton City School District - Hamilton
CONTRACTOR: GC Contracting

BILL OF MATERIAL

SHIP	MARK	NO PCS	DESCRIPTION	LENGTH	PIECE MARK	REMARKS
1	32L12	1	L6X3-1/2X5/16	6'-10"		SQ-2 A36 GALVANIZED
		2	L6X3-1/2X5/16	6'-10"	a13	A36 GALVANIZED

Avenue Fabricating Inc.
1281 Clough Pike
Batavia, OH 45103
(513) 752-1911

DRAWN BY	DATE	
TMc	07/23/2010	
CHKD. BY	DATE	
TAN		
JOB No.	DRG. No.	REV.
10-16	32L12	1

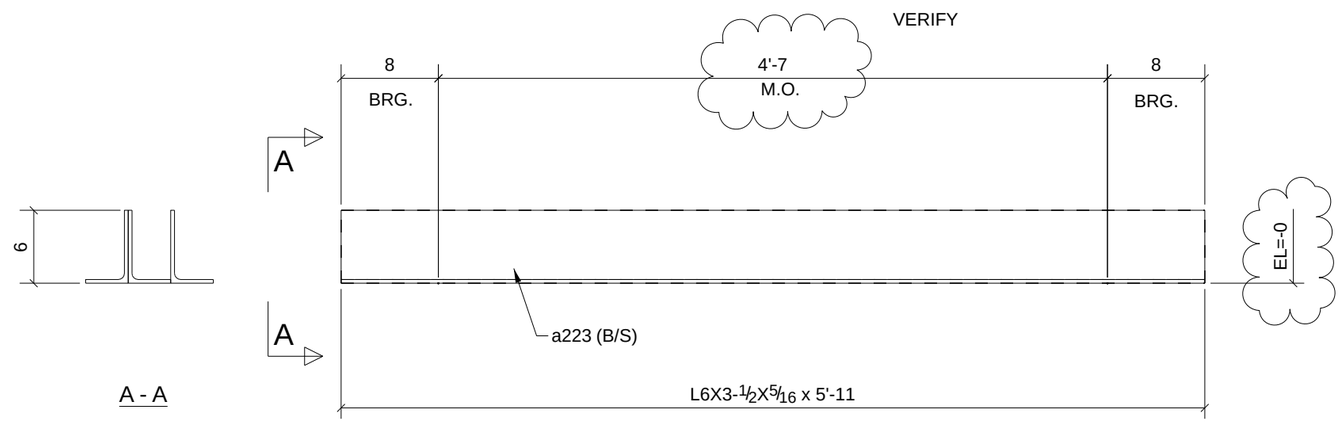

L-7 (M.O.=4'-7") LOCATION (2126)

ARCH./ENG/OWNER
PLEASE VERIFY / PROVIDE
TYPE & LOCATIONS
ERECTOR / GC ~ PLEASE
VERIFY / PROVIDE
M.O. @ EACH LOCATION

REV.	DESCRIPTION	DATE	DWN	CHK
A	For Approval	7/23/10	TMc	TAN

PHASE				
1	2	3	4	5
0	0	1	0	0

ONE - LINTEL - 32L13

(3 ANGLES EACH LINTEL)

GENERAL NOTES

MATERIAL: A992 / A36
ELECTRODES: E70XX LH
REF. DRG.
HOLES: 13/16 DIA. U/N
CONN'S.: -
SURFACE PREP. AND PAINT: SSPC-SP-2 GREY PRIMER DEVOE NA-195 (U.N,)

JOB USE
SHOP
APPROVAL

DESCRIPTION: LINTEL
PROJECT NAME: Hamilton High School Phase III
LOCATION: Hamilton City School District - Hamilton
CONTRACTOR: GC Contracting

BILL OF MATERIAL

SHIP	MARK	NO PCS	DESCRIPTION	LENGTH	PIECE MARK	REMARKS
1	32L13	1	L6X3-1/2X5/16	5'-11"		SQ-2 A36 GALVANIZED
		2	L6X3-1/2X5/16	5'-11"	a223	A36 GALVANIZED

Avenue Fabricating Inc.
1281 Clough Pike
Batavia, OH 45103
(513) 752-1911

DRAWN BY	DATE
TMc	07/23/2010
CHKD. BY	DATE
TAN	
JOB No.	DRG. No. / REV.
10-16	32L13 / 1

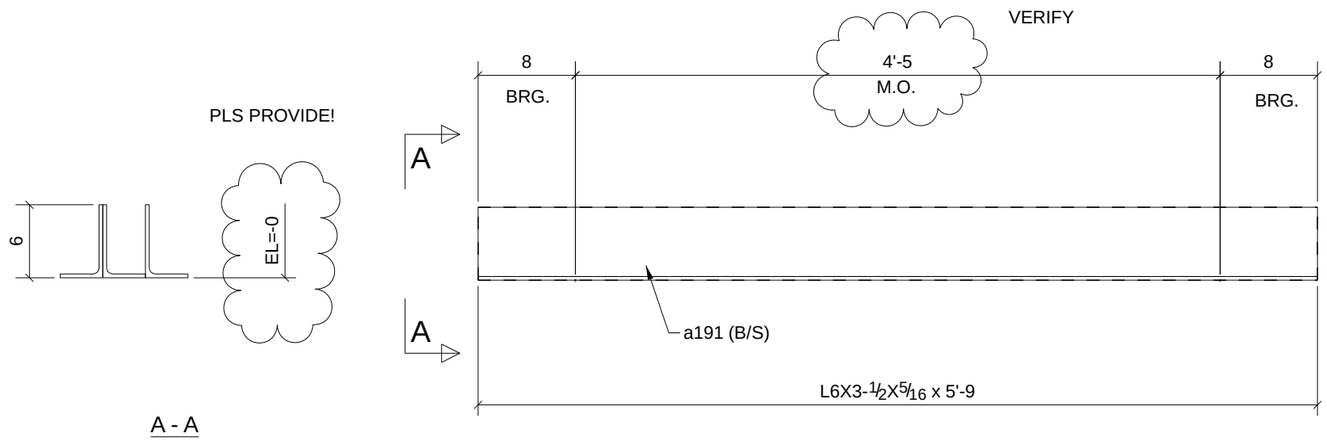

L-7 (M.O.=4'-5") LOCATION (2129)

ARCH./ENG/OWNER
PLEASE VERIFY / PROVIDE
TYPE & LOCATIONS
ERECTOR / GC ~ PLEASE
VERIFY / PROVIDE
M.O. @ EACH LOCATION

REV.	DESCRIPTION	DATE	DWN	CHK
A	For Approval	7/23/10	TMc	TAN

PHASE				
1	2	3	4	5
0	0	2	0	0

2 - LINTELS - 32L14

(3 ANGLES EACH LINTEL)

GENERAL NOTES

MATERIAL: A992 / A36
ELECTRODES: E70XX LH
REF. DRG.
HOLES: 13/16 DIA. U/N
CONN'S.: -
SURFACE PREP. AND PAINT: SSPC-SP-2 GREY PRIMER DEVOE NA-195 (U.N,)

JOB USE
SHOP
APPROVAL

DESCRIPTION: LINTEL
PROJECT NAME: Hamilton High School Phase III
LOCATION: Hamilton City School District - Hamilton
CONTRACTOR: GC Contracting

BILL OF MATERIAL

SHIP	MARK	NO PCS	DESCRIPTION	LENGTH	PIECE MARK	REMARKS
2	32L14	2	L6X3-1/2X5/16	5'-9"		SQ-2 A36 GALVANIZED
		4	L6X3-1/2X5/16	5'-9"	a191	A36 GALVANIZED

Avenue Fabricating Inc.
1281 Clough Pike
Batavia, OH 45103
(513) 752-1911

DRAWN BY	DATE	
TMc	07/23/2010	
CHKD. BY	DATE	
TAN		
JOB No.	DRG. No.	REV.
10-16	32L14	1

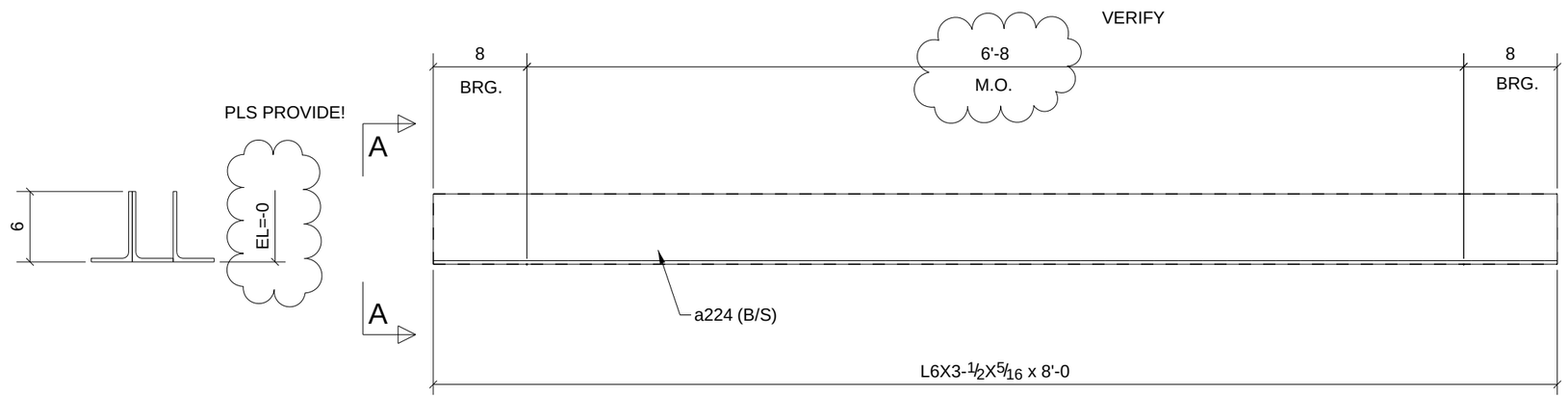

A - A

L-7 (M.O.=6'-8") LOCATION (2136)

ARCH./ENG/OWNER
PLEASE VERIFY / PROVIDE
TYPE & LOCATIONS
ERECTOR / GC ~ PLEASE
VERIFY / PROVIDE
M.O. @ EACH LOCATION

REV.	DESCRIPTION	DATE	DWN	CHK
A	For Approval	7/23/10	TMc	TAN

2 - LINTELS - 32L15

(3 ANGLES EACH LINTEL)

PHASE				
1	2	3	4	5
0	0	2	0	0

GENERAL NOTES

MATERIAL: A992 / A36
ELECTRODES: E70XX LH
REF. DRG.
HOLES: 13/16 DIA. U/N
CONN'S.: -
SURFACE PREP. AND PAINT: SSPC-SP-2
GREY PRIMER DEVOE NA-195 (U.N,)

JOB USE
SHOP
APPROVAL

DESCRIPTION: LINTEL
PROJECT NAME: Hamilton High School Phase III
LOCATION: Hamilton City School District - Hamilton
CONTRACTOR: GC Contracting

BILL OF MATERIAL

SHIP	MARK	NO PCS	DESCRIPTION	LENGTH	PIECE MARK	REMARKS
2	32L15	2	L6X3-1/2X5/16	8'-0"		SQ-2 A36 GALVANIZED
		4	L6X3-1/2X5/16	8'-0"	a224	A36 GALVANIZED

Avenue Fabricating Inc.
1281 Clough Pike
Batavia, OH 45103
(513) 752-1911

DRAWN BY	DATE	
TMc	07/23/2010	
CHKD. BY	DATE	
TAN		
JOB No.	DRG. No.	REV.
10-16	32L15	1

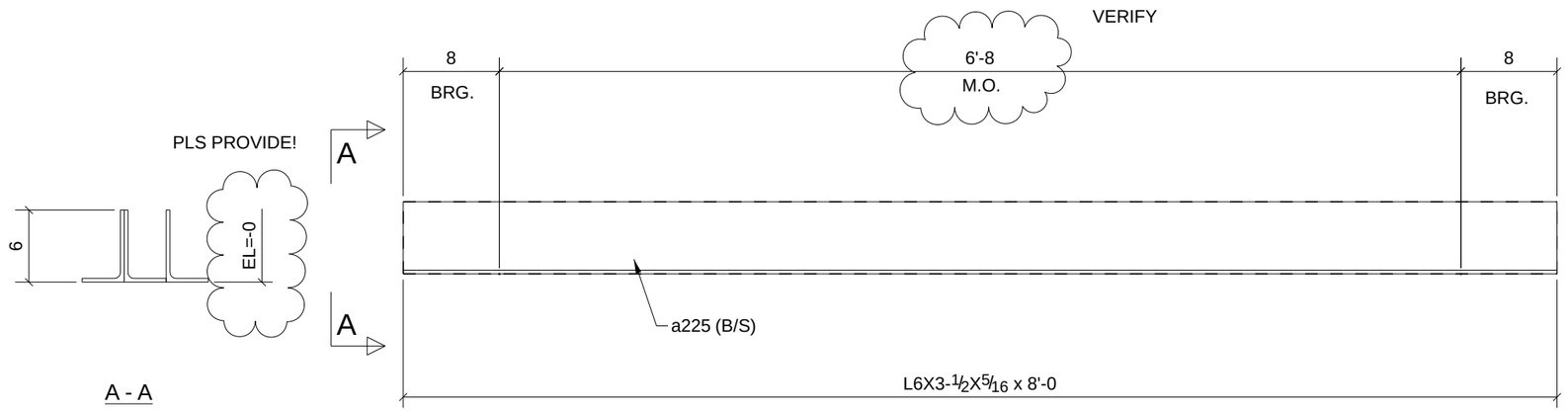

L-7 (M.O.=6'-8") LOCATION (2136)

ARCH./ENG/OWNER
PLEASE VERIFY / PROVIDE
TYPE & LOCATIONS
ERECTOR / GC ~ PLEASE
VERIFY / PROVIDE
M.O. @ EACH LOCATION

REV.	DESCRIPTION	DATE	DWN	CHK
A	For Approval	7/23/10	TMc	TAN

ONE - LINTEL - 32L16

(3 ANGLES EACH LINTEL)

PHASE				
1	2	3	4	5
0	0	1	0	0

GENERAL NOTES

MATERIAL: A992 / A36
ELECTRODES: E70XX LH
REF. DRG.
HOLES: 13/16 DIA. U/N
CONN'S.: -
SURFACE PREP. AND PAINT: SSPC-SP-2
GREY PRIMER DEVOE NA-195 (U.N,)

JOB USE
SHOP
APPROVAL

DESCRIPTION: LINTEL
PROJECT NAME: Hamilton High School Phase III
LOCATION: Hamilton City School District - Hamilton
CONTRACTOR: GC Contracting

BILL OF MATERIAL

SHIP	MARK	NO PCS	DESCRIPTION	LENGTH	PIECE MARK	REMARKS
1	32L16	1	L6X3-1/2X5/16	8'-0"		SQ-2 A36 1 S/C STD PRIMER
		2	L6X3-1/2X5/16	8'-0"	a225	A36 1 S/C STD PRIMER

Avenue Fabricating Inc.
1281 Clough Pike
Batavia, OH 45103
(513) 752-1911

DRAWN BY	DATE	
TMc	07/23/2010	
CHKD. BY	DATE	
TAN		
JOB No.	DRG. No.	REV.
10-16	32L16	1

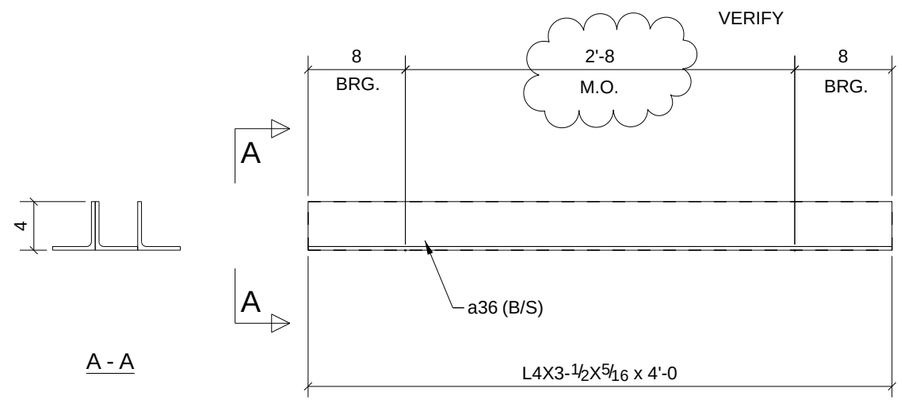

L-3 (M.O.=2'-8") LOCATION (1154)

ARCH./ENG/OWNER
PLEASE VERIFY / PROVIDE
TYPE & LOCATIONS
ERECTOR / GC ~ PLEASE
VERIFY / PROVIDE
M.O. @ EACH LOCATION

PHASE				
1	2	3	4	5
0	0	1	0	0

ONE - LINTEL - 32L2

(3 ANGLES EACH LINTEL)

REV.	DESCRIPTION	DATE	DWN	CHK
A	For Approval	7/20/10	TMc	TAN

GENERAL NOTES

MATERIAL: A992 / A36
ELECTRODES: E70XX LH
REF. DRG.
HOLES: 13/16 DIA. U/N
CONN'S.: -
SURFACE PREP. AND PAINT: SSPC-SP-2 GREY PRIMER DEVOE NA-195 (U.N,)

JOB USE
SHOP
APPROVAL

DESCRIPTION: LINTEL
PROJECT NAME: Hamilton High School Phase III
LOCATION: Hamilton City School District - Hamilton
CONTRACTOR: GC Contracting

BILL OF MATERIAL

SHIP	MARK	NO PCS	DESCRIPTION	LENGTH	PIECE MARK	REMARKS
1	32L2	1	L4X3-1/2X5/16	4'-0"		SQ-2 A36 GALVANIZED
		2	L4X3-1/2X5/16	4'-0"	a36	A36 GALVANIZED

Avenue Fabricating Inc.
1281 Clough Pike
Batavia, OH 45103
(513) 752-1911

DRAWN BY	DATE	
TMc	07/20/2010	
CHKD. BY	DATE	
TAN		
JOB No.	DRG. No.	REV.
10-16	32L2	1

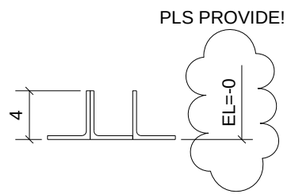

A - A

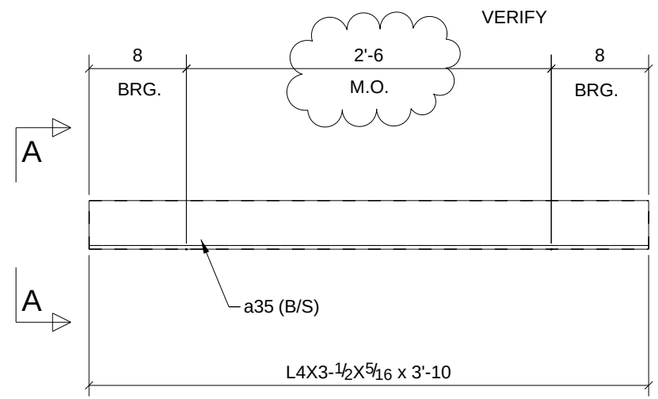

L-3 (M.O.=2'-6") LOCATION (1163)
(2133)

ARCH./ENG/OWNER
PLEASE VERIFY / PROVIDE
TYPE & LOCATIONS
ERECTOR / GC ~ PLEASE
VERIFY / PROVIDE
M.O. @ EACH LOCATION

REV.	DESCRIPTION	DATE	DWN	CHK
A	For Approval	7/20/10	TMc	TAN

PHASE				
1	2	3	4	5
0	0	2	0	0

2 - LINTELS - 32L3

(3 ANGLES EACH LINTEL)

GENERAL NOTES

MATERIAL: A992 / A36
ELECTRODES: E70XX LH
REF. DRG.
HOLES: 13/16 DIA. U/N
CONN'S.: -
SURFACE PREP. AND PAINT: SSPC-SP-2 GREY PRIMER DEVOE NA-195 (U.N,)

JOB USE
SHOP
APPROVAL

DESCRIPTION: LINTEL
PROJECT NAME: Hamilton High School Phase III
LOCATION: Hamilton City School District - Hamilton
CONTRACTOR: GC Contracting

BILL OF MATERIAL

SHIP	MARK	NO PCS	DESCRIPTION	LENGTH	PIECE MARK	REMARKS
2	32L3	2	L4X3-1/2X5/16	3'-10"		SQ-2 A36 GALVANIZED
		4	L4X3-1/2X5/16	3'-10"	a35	A36 GALVANIZED

Avenue Fabricating Inc.
1281 Clough Pike
Batavia, OH 45103
(513) 752-1911

DRAWN BY	DATE	
TMc	07/20/2010	
CHKD. BY	DATE	
TAN		
JOB No.	DRG. No.	REV.
10-16	32L3	1

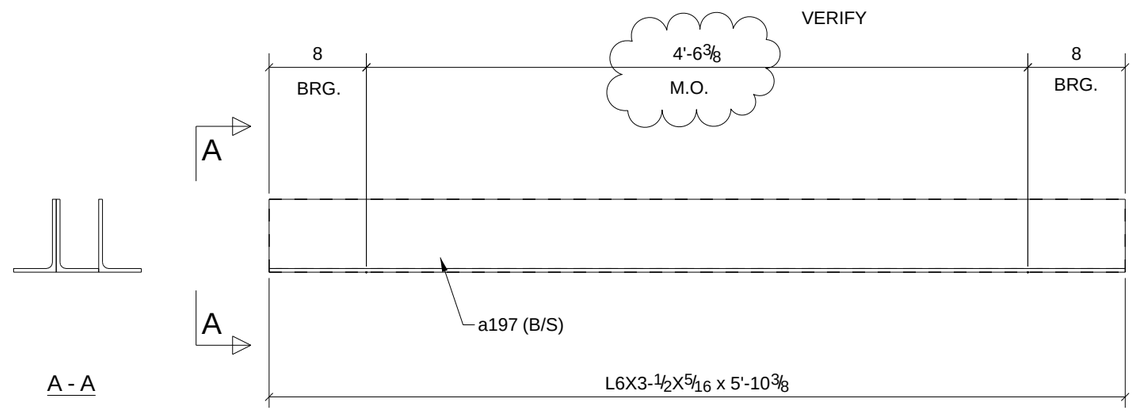

L-7 (M.O.=4'-8-3/8") LOCATION (1006 Verify)

ARCH./ENG/OWNER
PLEASE VERIFY / PROVIDE
TYPE & LOCATIONS
ERECTOR / GC ~ PLEASE
VERIFY / PROVIDE
M.O. @ EACH LOCATION

REV.	DESCRIPTION	DATE	DWN	CHK
A	For Approval	7/20/10	TMc	TAN

ONE - LINTEL - 32L4

(3 ANGLES EACH LINTEL)

PHASE				
1	2	3	4	5
0	0	0	0	1

GENERAL NOTES

MATERIAL: A992 / A36
ELECTRODES: E70XX LH
REF. DRG.
HOLES: 13/16 DIA. U/N
CONN'S.: -
SURFACE PREP. AND PAINT: SSPC-SP-2 GREY PRIMER DEVOE NA-195 (U.N,)

JOB USE
SHOP
APPROVAL

DESCRIPTION: LINTEL
PROJECT NAME: Hamilton High School Phase III
LOCATION: Hamilton City School District - Hamilton
CONTRACTOR: GC Contracting

BILL OF MATERIAL

SHIP	MARK	NO PCS	DESCRIPTION	LENGTH	PIECE MARK	REMARKS
1	32L4	1	L6X3-1/2X5/16	5'-10 3/8"		SQ-2 A36 1 S/C STD PRIMER
		2	L6X3-1/2X5/16	5'-10 3/8"	a197	A36 1 S/C STD PRIMER

Avenue Fabricating Inc.
1281 Clough Pike
Batavia, OH 45103
(513) 752-1911

DRAWN BY: TMc	DATE: 07/20/2010
CHKD. BY: TAN	DATE:
JOB No.: 10-16	DRG. No.: 32L4 REV.: 1

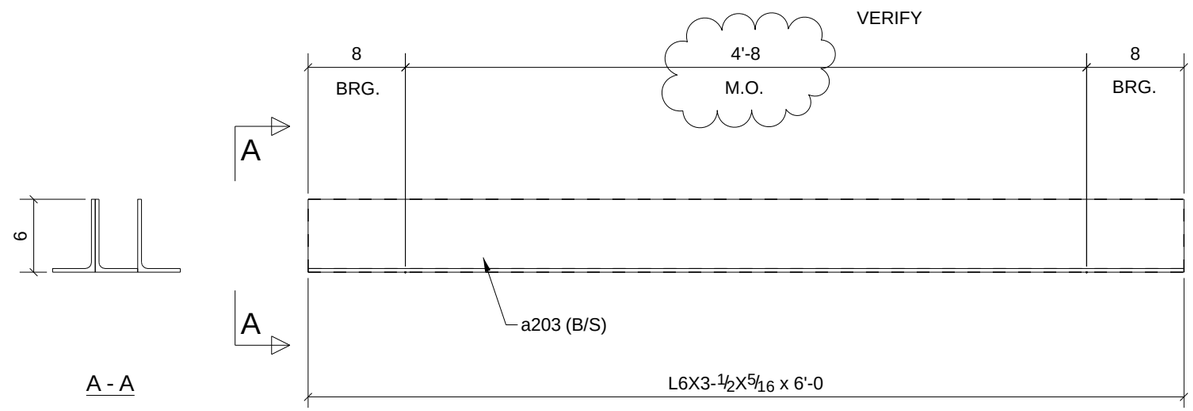

L-7 (M.O.=4'-8") LOCATION (1006 Verify) (2X)

ARCH./ENG/OWNER
PLEASE VERIFY / PROVIDE
TYPE & LOCATIONS
ERECTOR / GC ~ PLEASE
VERIFY / PROVIDE
M.O. @ EACH LOCATION

REV.	DESCRIPTION	DATE	DWN	CHK
A	For Approval	7/20/10	TMc	TAN

2 - LINTELS - 32L5

(3 ANGLES EACH LINTEL)

PHASE				
1	2	3	4	5
0	0	2	0	0

GENERAL NOTES

MATERIAL: A992 / A36
ELECTRODES: E70XX LH
REF. DRG.
HOLES: 13/16 DIA. U/N
CONN'S.: -
SURFACE PREP. AND PAINT: SSPC-SP-2 GREY PRIMER DEVOE NA-195 (U.N,)

JOB USE
SHOP
APPROVAL

DESCRIPTION: LINTEL
PROJECT NAME: Hamilton High School Phase III
LOCATION: Hamilton City School District - Hamilton
CONTRACTOR: GC Contracting

BILL OF MATERIAL

SHIP	MARK	NO PCS	DESCRIPTION	LENGTH	PIECE MARK	REMARKS
2	32L5	2	L6X3-1/2X5/16	6'-0"		SQ-2 A36 1 S/C STD PRIMER
		4	L6X3-1/2X5/16	6'-0"	a203	A36 1 S/C STD PRIMER

Avenue Fabricating Inc.
1281 Clough Pike
Batavia, OH 45103
(513) 752-1911

DRAWN BY	DATE	
TMc	07/20/2010	
CHKD. BY	DATE	
TAN		
JOB No.	DRG. No.	REV.
10-16	32L5	1

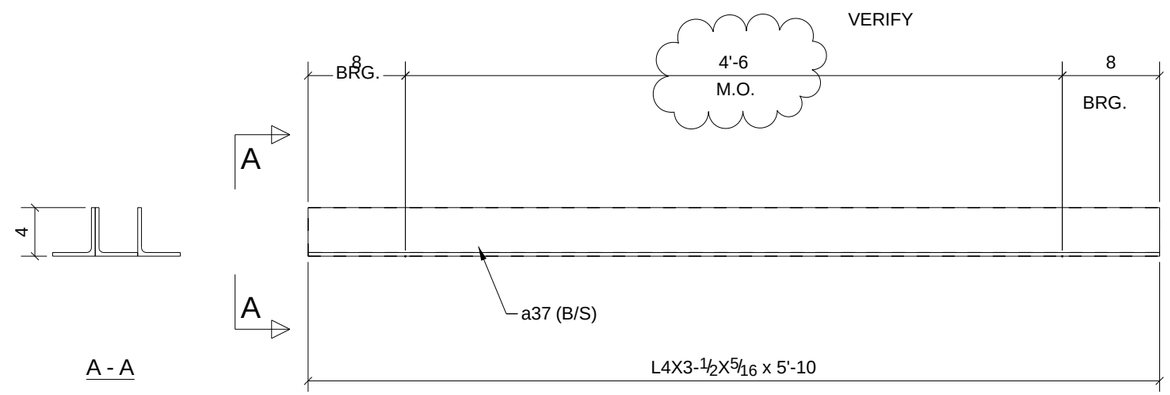

L-3 (M.O.=4'-6") LOCATION (1134)

ARCH./ENG/OWNER
PLEASE VERIFY / PROVIDE
TYPE & LOCATIONS
ERECTOR / GC ~ PLEASE
VERIFY / PROVIDE
M.O. @ EACH LOCATION

REV.	DESCRIPTION	DATE	DWN	CHK
A	For Approval	7/20/10	TMc	TAN

ONE - LINTEL - 32L6

(3 ANGLES EACH LINTEL)

PHASE				
1	2	3	4	5
0	0	1	0	0

GENERAL NOTES

MATERIAL: A992 / A36
ELECTRODES: E70XX LH
REF. DRG.
HOLES: 13/16 DIA. U/N
CONN'S.: -
SURFACE PREP. AND PAINT: SSPC-SP-2 GREY PRIMER DEVOE NA-195 (U.N,)

JOB USE
SHOP
APPROVAL

DESCRIPTION: LINTEL
PROJECT NAME: Hamilton High School Phase III
LOCATION: Hamilton City School District - Hamilton
CONTRACTOR: GC Contracting

BILL OF MATERIAL

SHIP	MARK	NO PCS	DESCRIPTION	LENGTH	PIECE MARK	REMARKS
1	32L6	1	L4X3-1/2X5/16	5'-10"		SQ-2 A36 GALVANIZED
		2	L4X3-1/2X5/16	5'-10"	a37	A36 GALVANIZED

Avenue Fabricating Inc.
1281 Clough Pike
Batavia, OH 45103
(513) 752-1911

DRAWN BY	DATE	
TMc	07/20/2010	
CHKD. BY	DATE	
TAN		
JOB No.	DRG. No.	REV.
10-16	32L6	1

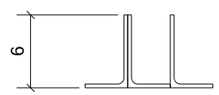

A - A

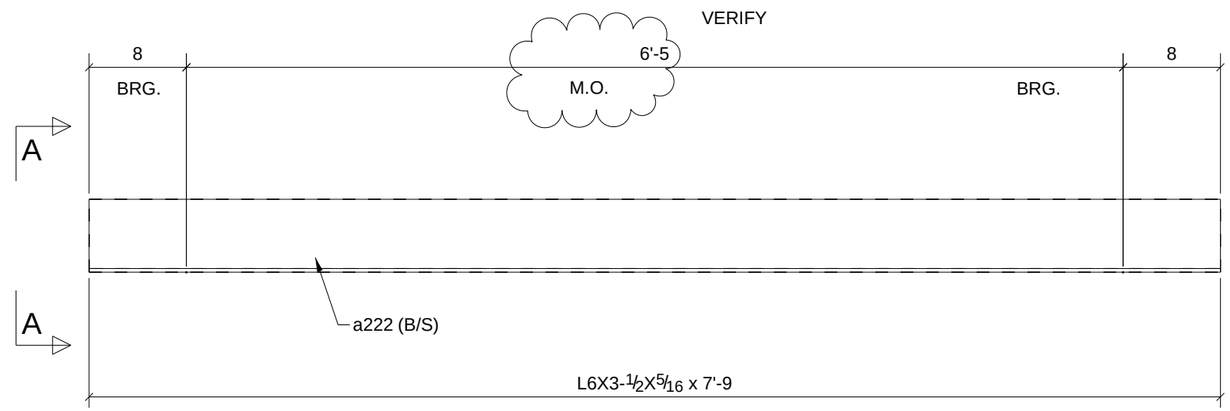

L-7 (M.O.=6'-5") LOCATION (2132)
(2131)
(2128)
(2124)
(2123)

ARCH./ENG/OWNER
PLEASE VERIFY / PROVIDE
TYPE & LOCATIONS
ERECTOR / GC ~ PLEASE
VERIFY / PROVIDE
M.O. @ EACH LOCATION

REV.	DESCRIPTION	DATE	DWN	CHK
A	For Approval	7/23/10	TMc	TAN

PHASE				
1	2	3	4	5
0	0	5	0	0

5 - LINTELS - 32L7

(3 ANGLES EACH LINTEL)

GENERAL NOTES

MATERIAL: A992 / A36
ELECTRODES: E70XX LH
REF. DRG.
HOLES: 13/16 DIA. U/N
CONN'S.: -
SURFACE PREP. AND PAINT: SSPC-SP-2 GREY PRIMER DEVOE NA-195 (U.N,)

JOB USE
SHOP
APPROVAL

DESCRIPTION: LINTEL
PROJECT NAME: Hamilton High School Phase III
LOCATION: Hamilton City School District - Hamilton
CONTRACTOR: GC Contracting

BILL OF MATERIAL

SHIP	MARK	NO PCS	DESCRIPTION	LENGTH	PIECE MARK	REMARKS
5	32L7	5	L6X3-1/2X5/16	7'-9"		SQ-2 A36 GALVANIZED
		10	L6X3-1/2X5/16	7'-9"	a222	A36 GALVANIZED

Avenue Fabricating Inc.
1281 Clough Pike
Batavia, OH 45103
(513) 752-1911

DRAWN BY	DATE	
TMc	07/23/2010	
CHKD. BY	DATE	
TAN		
JOB No.	DRG. No.	REV.
10-16	32L7	1

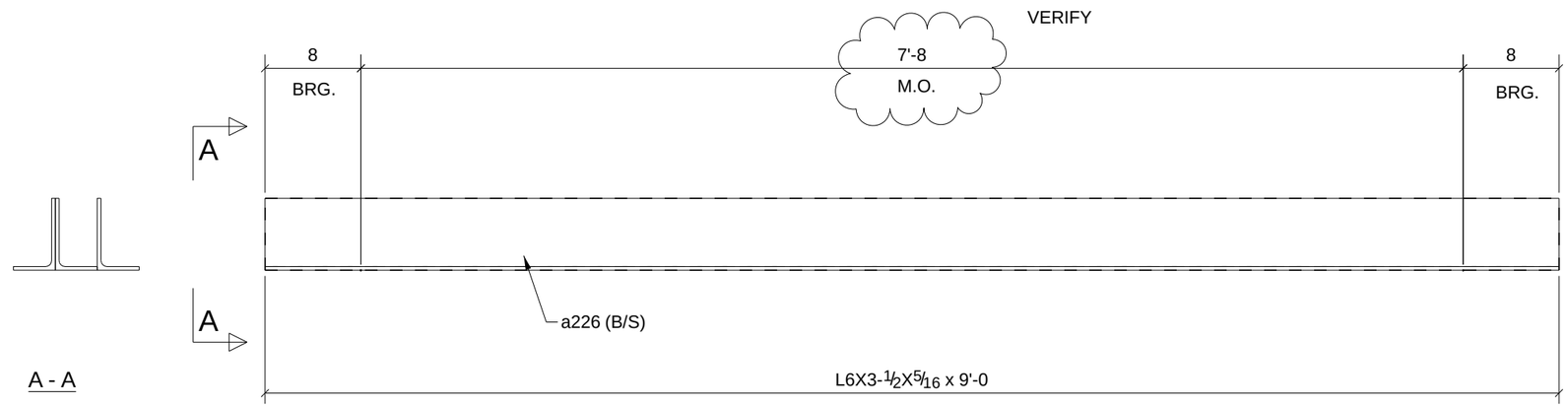

L-7 (M.O.=7'-8") LOCATION (2120)

ARCH./ENG/OWNER
PLEASE VERIFY / PROVIDE
TYPE & LOCATIONS
ERECTOR / GC ~ PLEASE
VERIFY / PROVIDE
M.O. @ EACH LOCATION

REV.	DESCRIPTION	DATE	DWN	CHK
A	For Approval	7/23/10	TMc	TAN

ONE - LINTEL - 32L8

(3 ANGLES EACH LINTEL)

PHASE				
1	2	3	4	5
0	0	1	0	0

GENERAL NOTES

MATERIAL: A992 / A36
ELECTRODES: E70XX LH
REF. DRG.
HOLES: 13/16 DIA. U/N
CONN'S.: -
SURFACE PREP. AND PAINT: SSPC-SP-2 GREY PRIMER DEVOE NA-195 (U.N,)

JOB USE
SHOP
APPROVAL

DESCRIPTION: LINTEL
PROJECT NAME: Hamilton High School Phase III
LOCATION: Hamilton City School District - Hamilton
CONTRACTOR: GC Contracting

BILL OF MATERIAL

SHIP	MARK	NO PCS	DESCRIPTION	LENGTH	PIECE MARK	REMARKS
1	32L8	1	L6X3-1/2X5/16	9'-0"		SQ-2 A36 1 S/C STD PRIMER
		2	L6X3-1/2X5/16	9'-0"	a226	A36 1 S/C STD PRIMER

Avenue Fabricating Inc.
1281 Clough Pike
Batavia, OH 45103
(513) 752-1911

DRAWN BY TMc	DATE 07/23/2010		
CHKD. BY TAN	DATE		
JOB No. 10-16	DRG. No. 32L8	REV. 1	

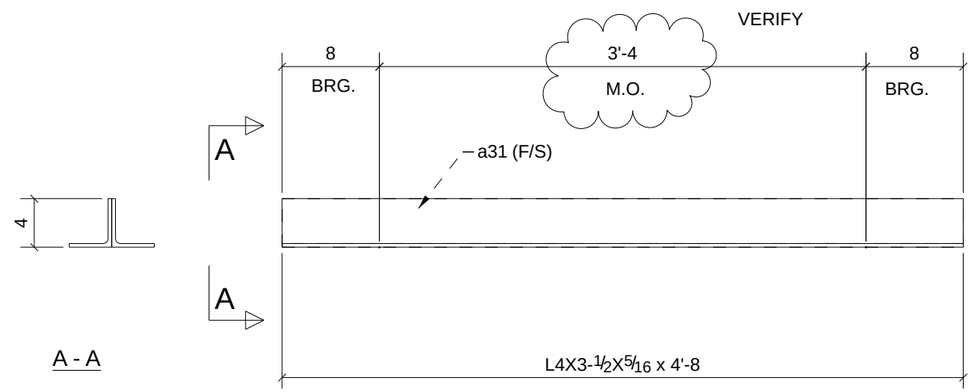

L-4 (M.O.=3'-4") LOCATION (2135)

ARCH./ENG/OWNER
PLEASE VERIFY / PROVIDE
TYPE & LOCATIONS
ERECTOR / GC ~ PLEASE
VERIFY / PROVIDE
M.O. @ EACH LOCATION

REV.	DESCRIPTION	DATE	DWN	CHK
A	For Approval	7/23/10	TMc	TAN

PHASE				
1	2	3	4	5
0	0	1	0	0

ONE - LINTEL - 32L9

(2 ANGLES EACH LINTEL)

GENERAL NOTES

MATERIAL: A992 / A36
ELECTRODES: E70XX LH
REF. DRG.
HOLES: 13/16 DIA. U/N
CONN'S.: -
SURFACE PREP. AND PAINT: SSPC-SP-2 GREY PRIMER DEVOE NA-195 (U.N,)

JOB USE
SHOP
APPROVAL

DESCRIPTION: LINTEL
PROJECT NAME: Hamilton High School Phase III
LOCATION: Hamilton City School District - Hamilton
CONTRACTOR: GC Contracting

BILL OF MATERIAL

SHIP	MARK	NO PCS	DESCRIPTION	LENGTH	PIECE MARK	REMARKS
1	32L9	1	L4X3-1/2X5/16	4'-8"		SQ-2 A36 1 S/C STD PRIMER
		1	L4X3-1/2X5/16	4'-8"	a31	A36 1 S/C STD PRIMER

Avenue Fabricating Inc.
1281 Clough Pike
Batavia, OH 45103
(513) 752-1911

DRAWN BY	DATE	
TMc	07/23/2010	
CHKD. BY	DATE	
TAN		
JOB No.	DRG. No.	REV.
10-16	32L9	1

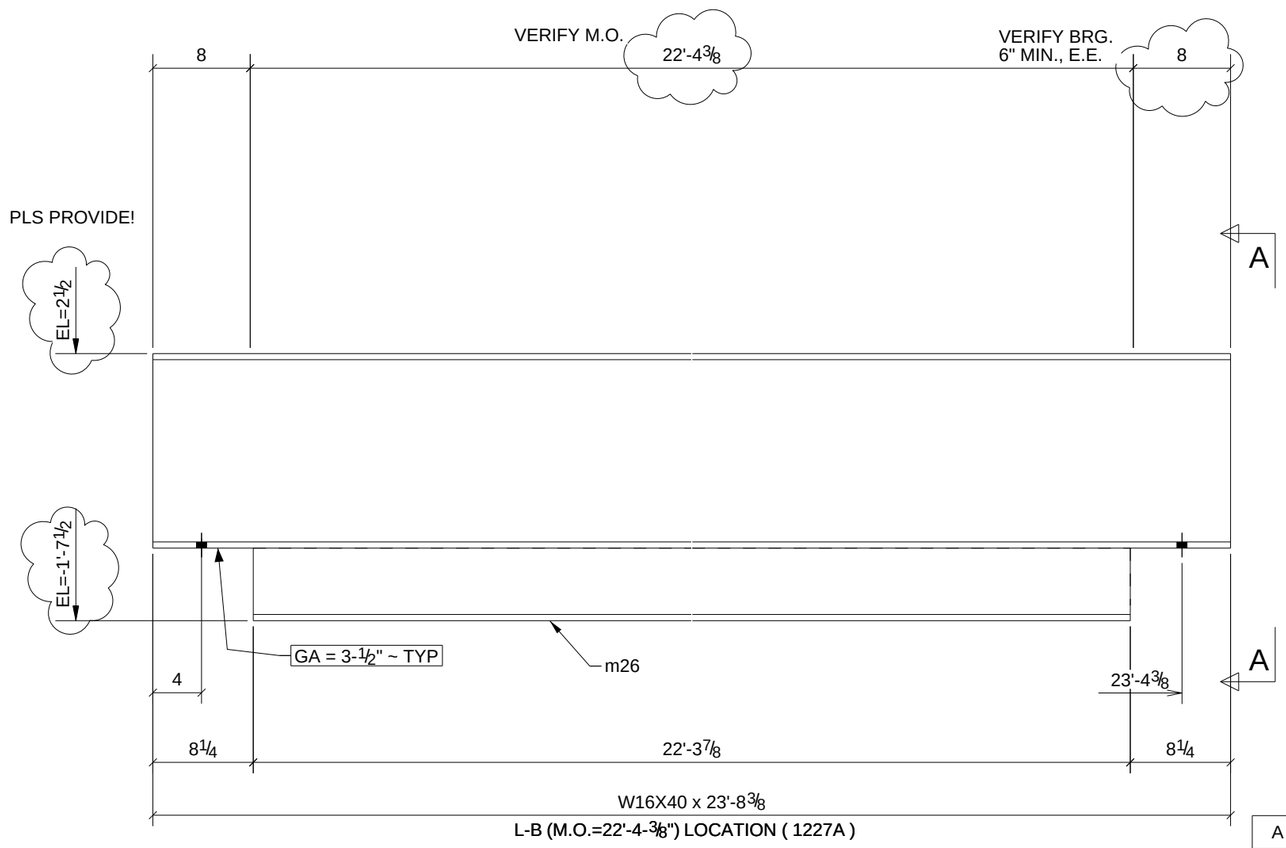

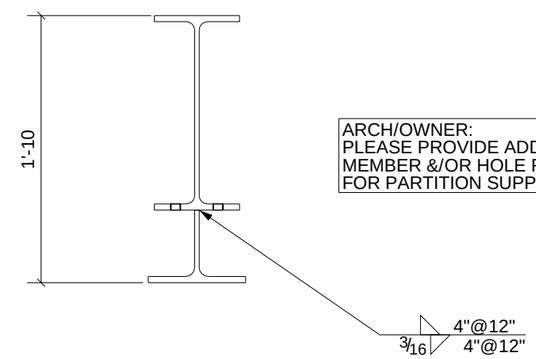

ARCH/OWNER:
PLEASE PROVIDE ADDITIONAL
MEMBER &/OR HOLE REQUIREMENTS
FOR PARTITION SUPPORT & ELEVATION

A - A

ONE - LINTEL - 42L1

PHASE				
1	2	3	4	5
0	0	0	0	1

W	16"x1/4"
F	7"x1/2"

(1) SHOP NOTE: MARK WITH SHIP & PC MK. & SHIP LOOSE WITH BEAM

REV.	DESCRIPTION	DATE	DWN	CHK
A	For Approval	7/20/10	TMc	TAN

GENERAL NOTES

MATERIAL: A992 / A36	ELECTRODES: E70XX LH	REF. DRG.	JOB USE
HOLES: 13/16 DIA. U/N	CONN'S.: -		SHOP
SURFACE PREP. AND PAINT: SSPC-SP-2 GREY PRIMER DEVOE NA-195 (U.N,)			APPROVAL

DESCRIPTION: LINTEL

PROJECT NAME: Hamilton High School Phase III
LOCATION: Hamilton City School District - Hamilton

CONTRACTOR: GC Contracting

BILL OF MATERIAL

SHIP	MARK	NO PCS	DESCRIPTION	LENGTH	PIECE MARK	REMARKS
1	42L1	1	W16X40	23'-8 3/8"		SQ-2 A992 -
		1	WT6X20	22'-3 7/8"	m26	A36

Avenue Fabricating Inc.
1281 Clough Pike
Batavia, OH 45103
(513) 752-1911

DRAWN BY TMc	DATE 07/20/2010		
CHKD. BY TAN	DATE		
JOB No. 10-16	DRG. No. 42L1	REV. 1	

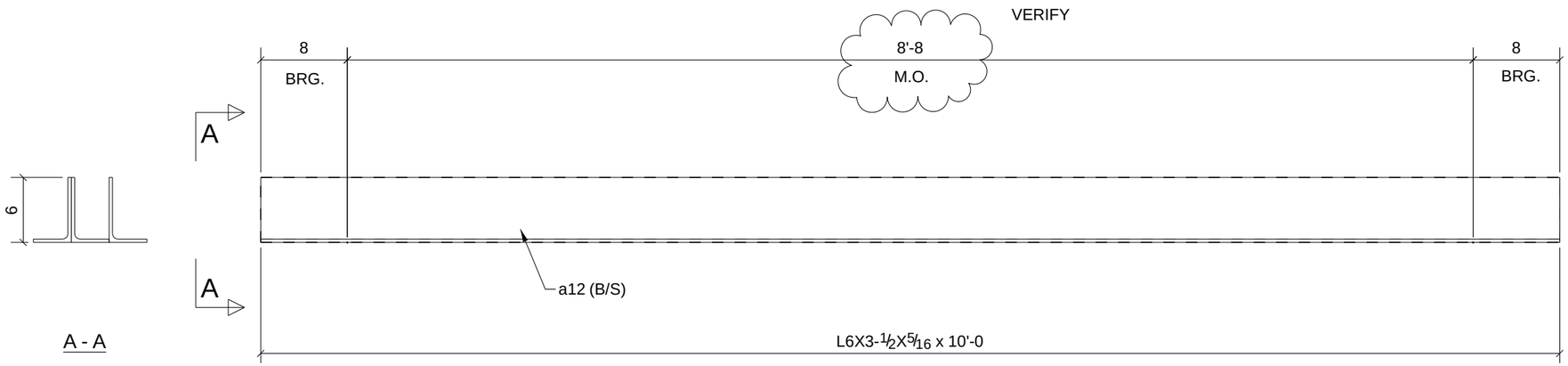

L-7 (M.O.=8'-8") LOCATION (1515)
(1116)
(1117)
(1118)
(1119)

ARCH./ENG/OWNER
PLEASE VERIFY / PROVIDE
TYPE & LOCATIONS
ERECTOR / GC ~ PLEASE
VERIFY / PROVIDE
M.O. @ EACH LOCATION

PHASE				
1	2	3	4	5
0	0	0	5	0

5 - LINTELS - 42L10

(3 ANGLES EACH LINTEL)

REV.	DESCRIPTION	DATE	DWN	CHK
A	For Approval	7/20/10	TMc	TAN

GENERAL NOTES

MATERIAL: A992 / A36
ELECTRODES: E70XX LH
REF. DRG.
HOLES: 13/16 DIA. U/N
CONN'S.: -
SURFACE PREP. AND PAINT: SSPC-SP-2 GREY PRIMER DEVOE NA-195 (U.N,)

JOB USE
SHOP
APPROVAL

DESCRIPTION: LINTEL
PROJECT NAME: Hamilton High School Phase III
LOCATION: Hamilton City School District - Hamilton
CONTRACTOR: GC Contracting

BILL OF MATERIAL

SHIP	MARK	NO PCS	DESCRIPTION	LENGTH	PIECE MARK	REMARKS
5	42L10	5	L6X3-1/2X5/16	10'-0"		SQ-2 A36 GALVANIZED
		10	L6X3-1/2X5/16	10'-0"	a12	A36 GALVANIZED

Avenue Fabricating Inc.
1281 Clough Pike
Batavia, OH 45103
(513) 752-1911

DRAWN BY	DATE	
TMc	07/20/2010	
CHKD. BY	DATE	
TAN		
JOB No.	DRG. No.	REV.
10-16	42L10	1

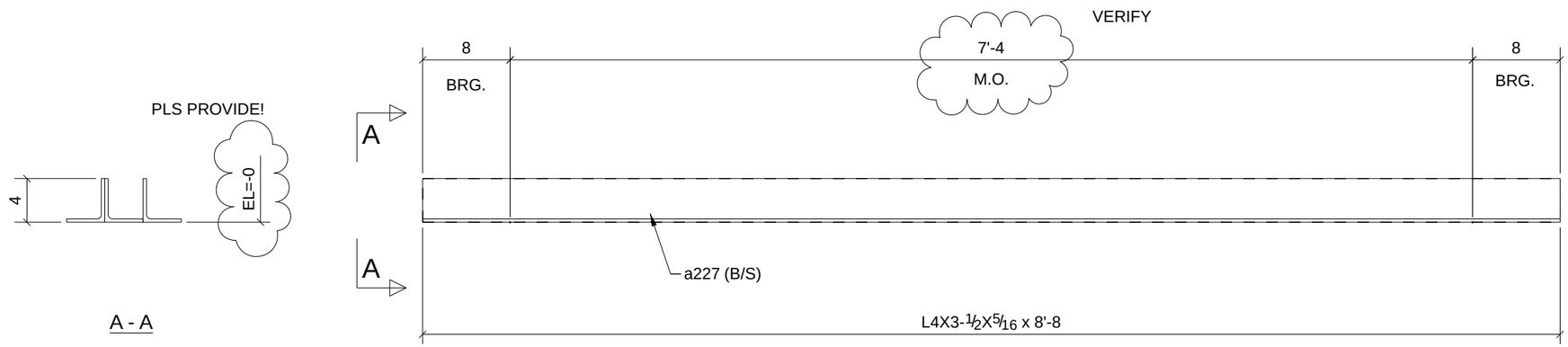

L-3 (M.O.=7'-4") LOCATION (2117)

ARCH./ENG/OWNER
PLEASE VERIFY / PROVIDE
TYPE & LOCATIONS
ERECTOR / GC ~ PLEASE
VERIFY / PROVIDE
M.O. @ EACH LOCATION

REV.	DESCRIPTION	DATE	DWN	CHK
A	For Approval	7/23/10	TMc	TAN

ONE - LINTEL - 42L11

(3 ANGLES EACH LINTEL)

PHASE				
1	2	3	4	5
0	0	0	1	0

GENERAL NOTES

MATERIAL: A992 / A36
ELECTRODES: E70XX LH
REF. DRG.
HOLES: 13/16 DIA. U/N
CONN'S.: -
SURFACE PREP. AND PAINT: SSPC-SP-2
GREY PRIMER DEVOE NA-195 (U.N,)

JOB USE
SHOP
APPROVAL

DESCRIPTION: LINTEL
PROJECT NAME: Hamilton High School Phase III
LOCATION: Hamilton City School District - Hamilton
CONTRACTOR: GC Contracting

BILL OF MATERIAL

SHIP	MARK	NO PCS	DESCRIPTION	LENGTH	PIECE MARK	REMARKS
1	42L11	1	L4X3-1/2X5/16	8'-8"		SQ-2 A36 GALVANIZED
		2	L4X3-1/2X5/16	8'-8"	a227	A36 GALVANIZED

Avenue Fabricating Inc.
1281 Clough Pike
Batavia, OH 45103
(513) 752-1911

DRAWN BY	DATE	
TMc	07/23/2010	
CHKD. BY	DATE	
TAN		
JOB No.	DRG. No.	REV.
10-16	42L11	1

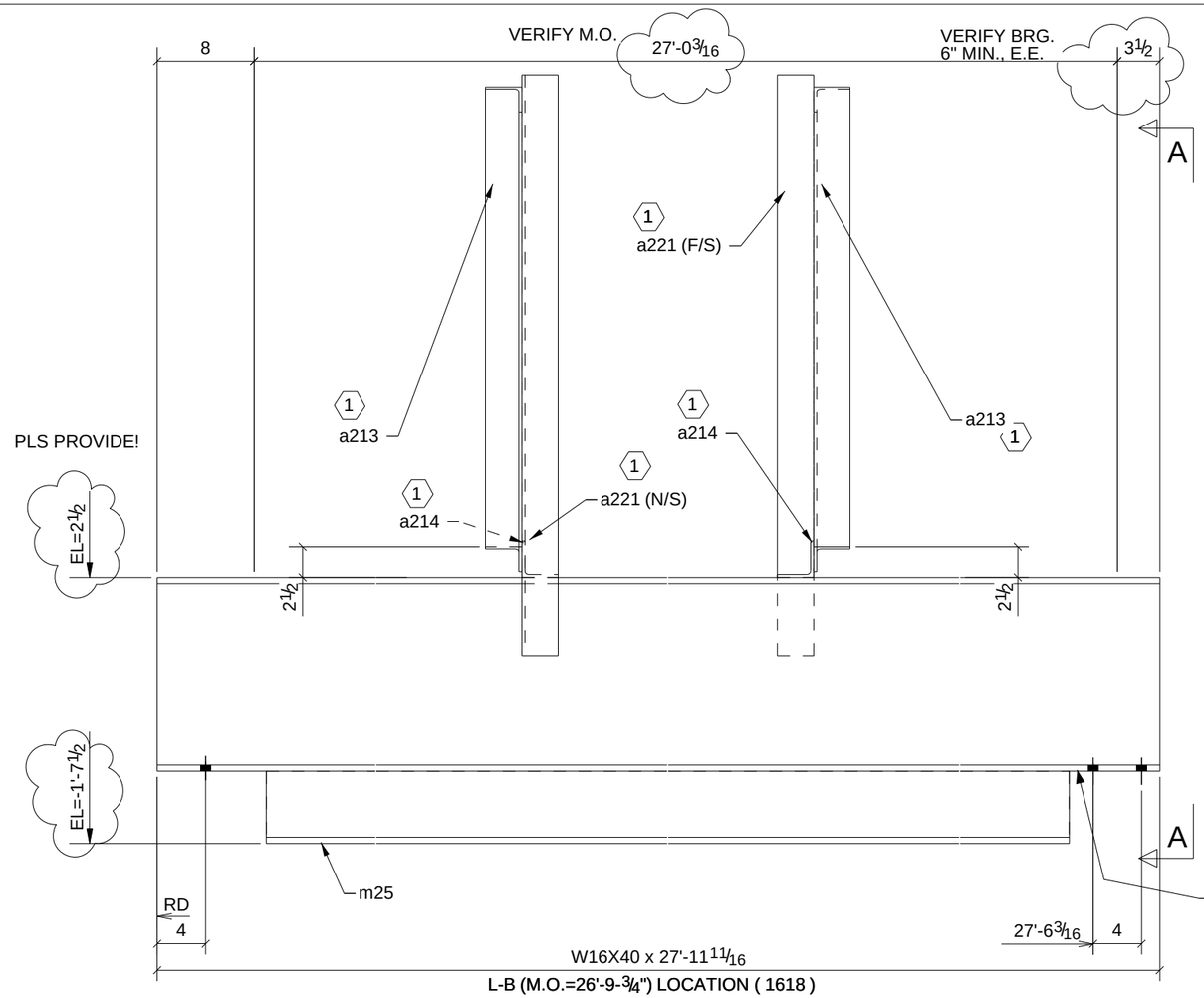

ONE - LINTEL - 42L12

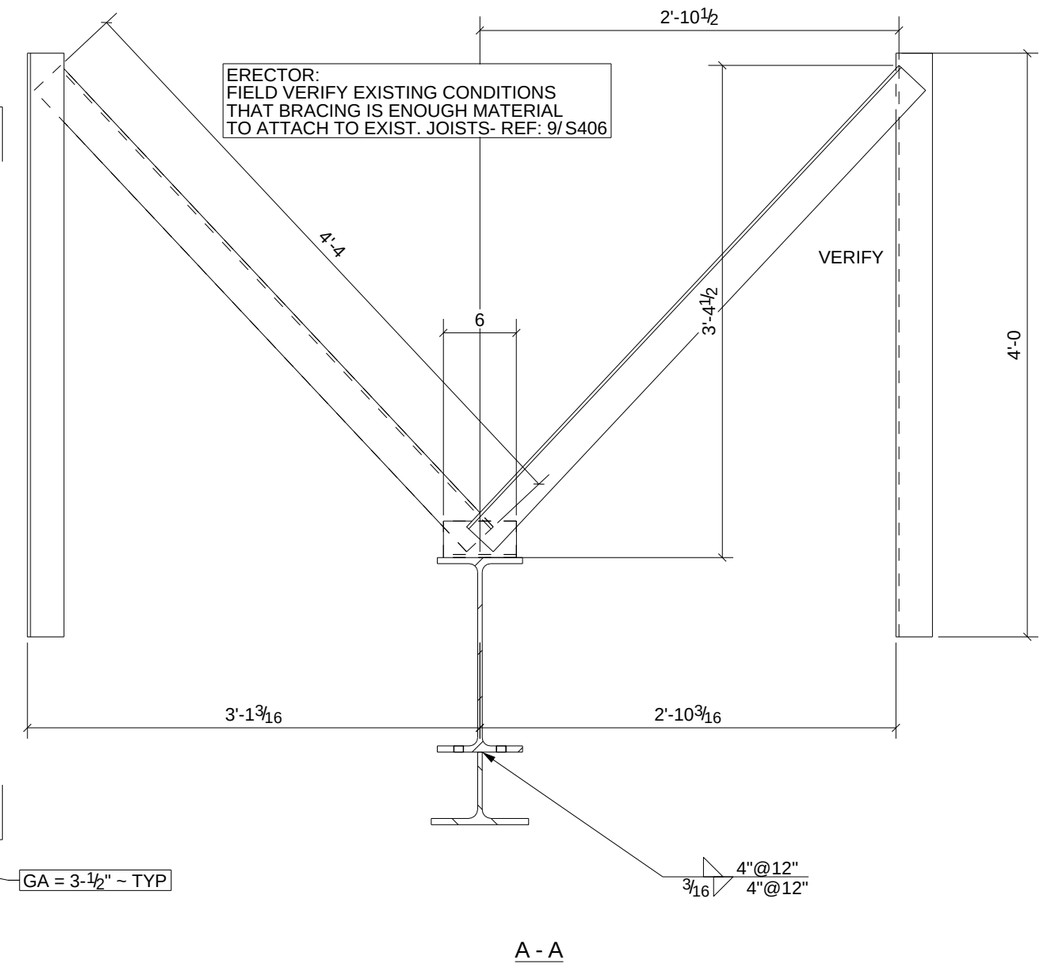

A - A

PHASE				
1	2	3	4	5
0	0	0	1	0

W	16"x1/4"
F	7"x1/2"

REV.	DESCRIPTION	DATE	DWN	CHK
A	For Approval	7/20/10	TMc	TAN

ARCH/OWNER:
PLEASE PROVIDE ADDITIONAL
MEMBER &/OR HOLE REQUIREMENTS
FOR PARTITIONS SUPPORT & ELEVATION

GENERAL NOTES

MATERIAL: A992 / A36	ELECTRODES: E70XX LH	REF. DRG.	JOB USE
HOLES: 13/16 DIA. U/N	CONN'S.: -		SHOP
SURFACE PREP. AND PAINT: SSPC-SP-2 GREY PRIMER DEVOE NA-195 (U.N,)			APPROVAL

1 SHOP NOTE: MARK WITH SHIP & PC MK. & SHIP LOOSE WITH BEAM

BILL OF MATERIAL

SHIP	MARK	NO PCS	DESCRIPTION	LENGTH	PIECE MARK	REMARKS
1	42L12	1	W16X40	27'-11 11/16"		SQ-2 A992 1 S/C STD PRIMER
		2	L3X3X1/4	4'-4"	a213	A36 1 S/C STD PRIMER
		2	L3X3X1/4	0'-6"	a214	A36 1 S/C STD PRIMER
		2	L3X3X1/4	4'-0"	a221	A36 1 S/C STD PRIMER
		1	WT6X20	26'-7 3/16"	m25	A36 1 S/C STD PRIMER

DESCRIPTION:	LINTEL
PROJECT NAME	Hamilton High School Phase III
LOCATION	Hamilton City School District - Hamilton
CONTRACTOR	GC Contracting

Avenue Fabricating Inc.
1281 Clough Pike
Batavia, OH 45103
(513) 752-1911

DRAWN BY TMc	DATE 07/20/2010	
CHKD. BY TAN	DATE	
JOB No. 10-16	DRG. No. 42L12	REV. 1

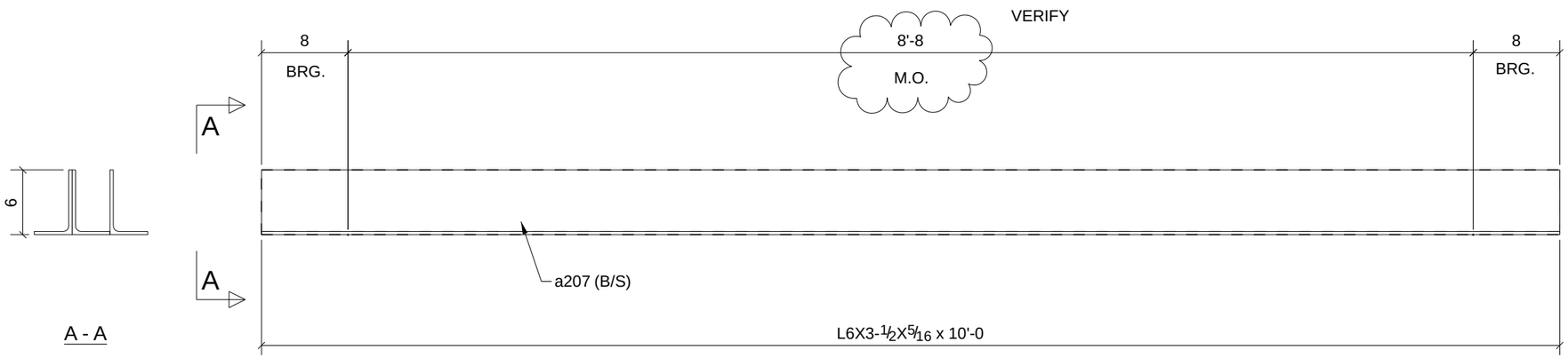

L-7 (M.O.=8'-8") LOCATION (1618)
(1619)

ARCH./ENG/OWNER
PLEASE VERIFY / PROVIDE
TYPE & LOCATIONS
ERECTOR / GC ~ PLEASE
VERIFY / PROVIDE
M.O. @ EACH LOCATION

REV.	DESCRIPTION	DATE	DWN	CHK
A	For Approval	7/20/10	TMc	TAN

2 - LINTELS - 42L13

(3 ANGLES EACH LINTEL)

PHASE				
1	2	3	4	5
0	0	0	2	0

GENERAL NOTES

MATERIAL: A992 / A36
ELECTRODES: E70XX LH
REF. DRG.
HOLES: 13/16 DIA. U/N
CONN'S.: -
SURFACE PREP. AND PAINT: SSPC-SP-2
GREY PRIMER DEVOE NA-195 (U.N,)

JOB USE
SHOP
APPROVAL

DESCRIPTION: LINTEL
PROJECT NAME: Hamilton High School Phase III
LOCATION: Hamilton City School District - Hamilton
CONTRACTOR: GC Contracting

BILL OF MATERIAL

SHIP	MARK	NO PCS	DESCRIPTION	LENGTH	PIECE MARK	REMARKS
2	42L13	2	L6X3-1/2X5/16	10'-0"		SQ-2 A36 1 S/C STD PRIMER
		4	L6X3-1/2X5/16	10'-0"	a207	A36 1 S/C STD PRIMER

Avenue Fabricating Inc.
1281 Clough Pike
Batavia, OH 45103
(513) 752-1911

DRAWN BY	DATE	
TMc	07/20/2010	
CHKD. BY	DATE	
TAN		
JOB No.	DRG. No.	REV.
10-16	42L13	1

GRID LOCATION	BOTTOM ELEVATION
	-12'-5"5/8

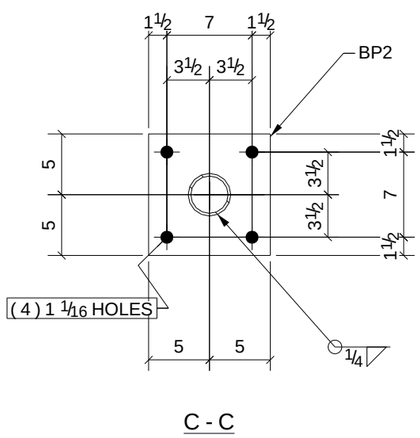

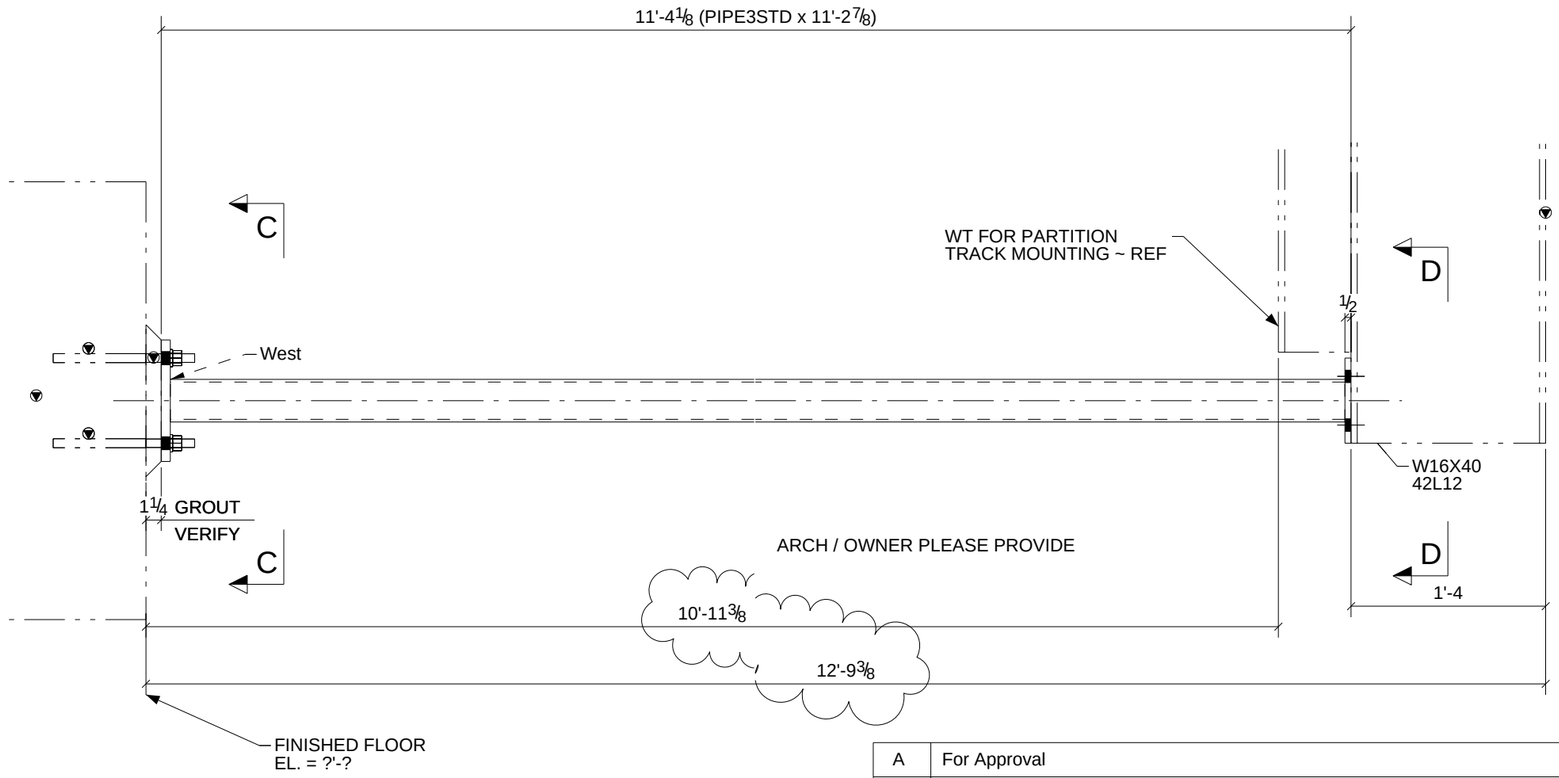

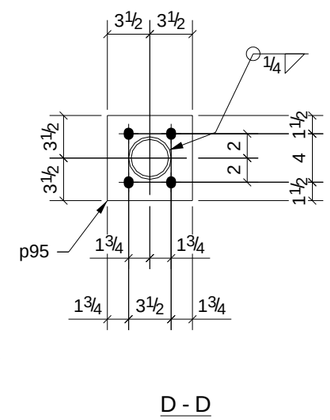

ONE - COLUMN - 42L14

PHASE				
1	2	3	4	5
1	0	0	0	0

REV.	DESCRIPTION	DATE	DWN	CHK
A	For Approval	7/23/10	TMc	TAN

GENERAL NOTES

MATERIAL: A992 / A36 ELECTRODES: E70XX LH REF. DRG.

HOLES: 13/16 DIA. U/N CONN'S.: -

SURFACE PREP. AND PAINT: SSPC-SP-2 GREY PRIMER DEVOE NA-195 (U.N,)

JOB USE

SHOP

APPROVAL

DESCRIPTION: COLUMN

PROJECT NAME Hamilton High School Phase III

LOCATION Hamilton City School District - Hamilton

CONTRACTOR GC Contracting

BILL OF MATERIAL

SHIP	MARK	NO PCS	DESCRIPTION	LENGTH	PIECE MARK	REMARKS
1	42L14	1	PIPE3STD	11'-2 7/8"		SQ-2 A53 1 S/C STD PRIMER
		1	BAR3/4"X10"	0'-10"	BP2	A36 1 S/C STD PRIMER
		1	BAR1/2"X7"	0'-7"	p95	A36 1 S/C STD PRIMER

Avenue Fabricating Inc.
1281 Clough Pike
Batavia, OH 45103
(513) 752-1911

DRAWN BY	DATE	
TMc	07/23/2010	
CHKD. BY	DATE	
TAN		
JOB No.	DRG. No.	REV.
10-16	42L14	1

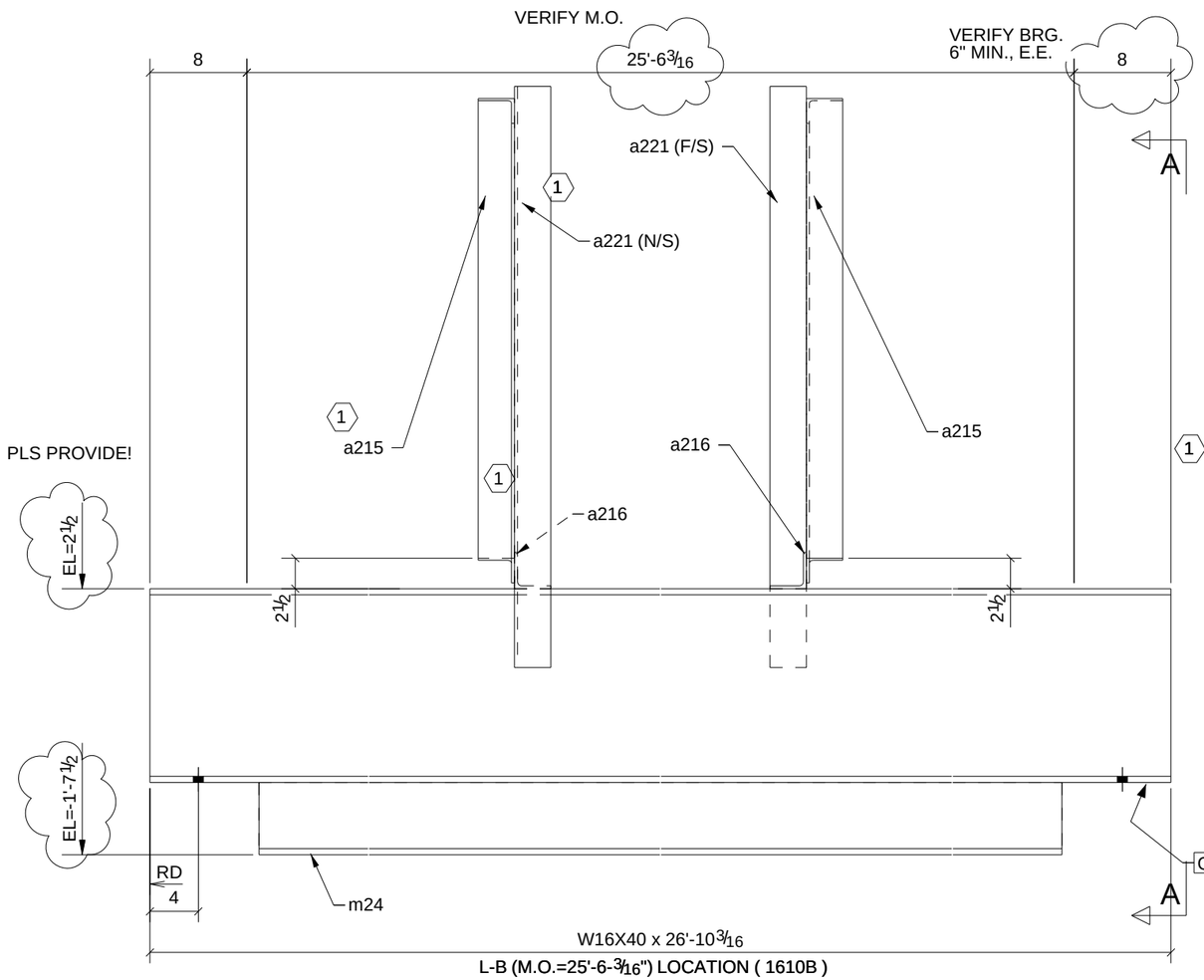

ONE - LINTEL - 42L15

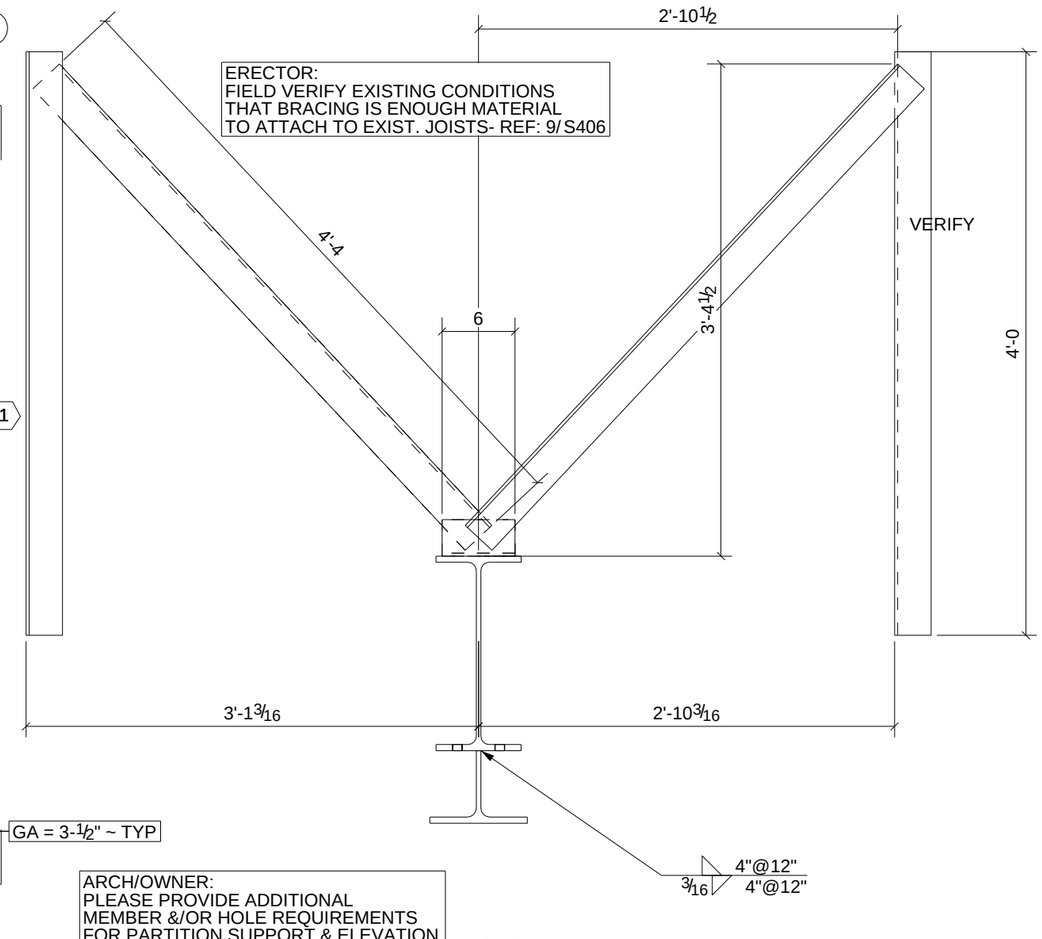

A - A

PHASE				
1	2	3	4	5
0	1	0	0	0

W	16"x1/4"
F	7"x1/2"

REV.	DESCRIPTION	DATE	DWN	CHK
A	For Approval	7/20/10	TMc	TAN

GENERAL NOTES

MATERIAL: A992 / A36	ELECTRODES: E70XX LH	REF. DRG.	JOB USE
HOLES: 13/16 DIA. U/N	CONN'S.: -		SHOP
SURFACE PREP. AND PAINT: SSPC-SP-2 GREY PRIMER DEVOE NA-195 (U.N,)			APPROVAL

1 SHOP NOTE: MARK WITH SHIP & PC MK. & SHIP LOOSE WITH BEAM

BILL OF MATERIAL

SHIP	MARK	NO PCS	DESCRIPTION	LENGTH	PIECE MARK	REMARKS
1	42L15	1	W16X40	26'-10 3/16"		SQ-2 A992 1 S/C STD PRIMER
		2	L3X3X1/4	4'-4"	a215	A36 1 S/C STD PRIMER
		2	L3X3X1/4	0'-6"	a216	A36 1 S/C STD PRIMER
		2	L3X3X1/4	4'-0"	a221	A36 1 S/C STD PRIMER
		1	WT6X20	25'-4 3/16"	m24	A36 1 S/C STD PRIMER

DESCRIPTION:	LINTEL
PROJECT NAME	Hamilton High School Phase III
LOCATION	Hamilton City School District - Hamilton
CONTRACTOR	GC Contracting

Avenue Fabricating Inc.
1281 Clough Pike
Batavia, OH 45103
(513) 752-1911

DRAWN BY TMc	DATE 07/20/2010	
CHKD. BY TAN	DATE	
JOB No. 10-16	DRG. No. 42L15	REV. 1

A - A

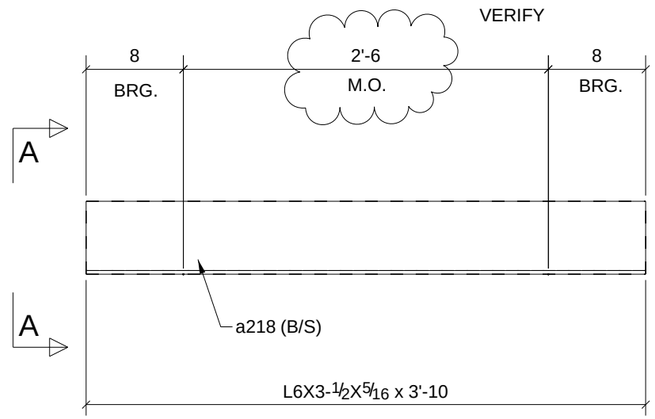

L-7 (M.O.=2'-6") LOCATION (2105)

ARCH./ENG/OWNER
PLEASE VERIFY / PROVIDE
TYPE & LOCATIONS
ERECTOR / GC ~ PLEASE
VERIFY / PROVIDE
M.O. @ EACH LOCATION

REV.	DESCRIPTION	DATE	DWN	CHK
A	For Approval	7/23/10	TMc	TAN

PHASE				
1	2	3	4	5
0	0	0	1	0

ONE - LINTEL - 42L16

(3 ANGLES EACH LINTEL)

GENERAL NOTES

MATERIAL: A992 / A36
ELECTRODES: E70XX LH
REF. DRG.
HOLES: 13/16 DIA. U/N
CONN'S.: -
SURFACE PREP. AND PAINT: SSPC-SP-2 GREY PRIMER DEVOE NA-195 (U.N,)

JOB USE
SHOP
APPROVAL

DESCRIPTION: LINTEL
PROJECT NAME: Hamilton High School Phase III
LOCATION: Hamilton City School District - Hamilton
CONTRACTOR: GC Contracting

BILL OF MATERIAL

SHIP	MARK	NO PCS	DESCRIPTION	LENGTH	PIECE MARK	REMARKS
1	42L16	1	L6X3-1/2X5/16	3'-10"		SQ-2 A36 GALVANIZED
		2	L6X3-1/2X5/16	3'-10"	a218	A36 GALVANIZED

Avenue Fabricating Inc.
1281 Clough Pike
Batavia, OH 45103
(513) 752-1911

DRAWN BY TMc	DATE 07/23/2010		
CHKD. BY TAN	DATE		
JOB No. 10-16	DRG. No. 42L16	REV. 1	

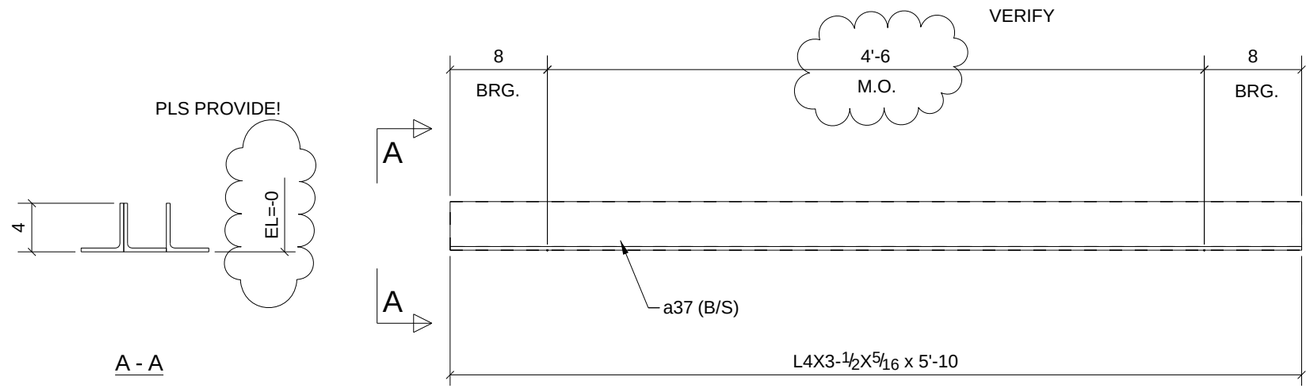

L-3 (M.O.=2'-6") LOCATION (2111)

ARCH./ENG/OWNER
PLEASE VERIFY / PROVIDE
TYPE & LOCATIONS
ERECTOR / GC ~ PLEASE
VERIFY / PROVIDE
M.O. @ EACH LOCATION

REV.	DESCRIPTION	DATE	DWN	CHK
A	For Approval	7/23/10	TMc	TAN

ONE - LINTEL - 42L17

(3 ANGLES EACH LINTEL)

PHASE				
1	2	3	4	5
0	0	0	1	0

GENERAL NOTES

MATERIAL: A992 / A36
ELECTRODES: E70XX LH
REF. DRG.
HOLES: 13/16 DIA. U/N
CONN'S.: -
SURFACE PREP. AND PAINT: SSPC-SP-2 GREY PRIMER DEVOE NA-195 (U.N,)

JOB USE
SHOP
APPROVAL

DESCRIPTION: LINTEL
PROJECT NAME: Hamilton High School Phase III
LOCATION: Hamilton City School District - Hamilton
CONTRACTOR: GC Contracting

BILL OF MATERIAL

SHIP	MARK	NO PCS	DESCRIPTION	LENGTH	PIECE MARK	REMARKS
1	42L17	1	L4X3-1/2X5/16	5'-10"		SQ-2 A36 GALVANIZED
		2	L4X3-1/2X5/16	5'-10"	a37	A36 GALVANIZED

Avenue Fabricating Inc.
1281 Clough Pike
Batavia, OH 45103
(513) 752-1911

DRAWN BY	DATE	
TMc	07/23/2010	
CHKD. BY	DATE	
TAN		
JOB No.	DRG. No.	REV.
10-16	42L17	1

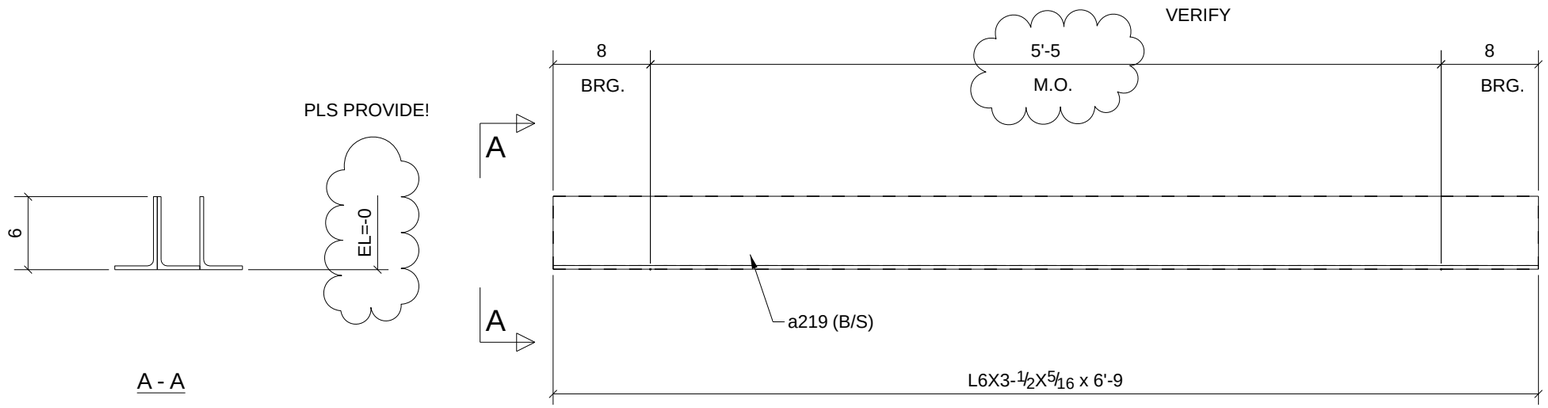

L-7 (M.O.=5'-7") LOCATION (2115)

ARCH./ENG/OWNER
PLEASE VERIFY / PROVIDE
TYPE & LOCATIONS
ERECTOR / GC ~ PLEASE
VERIFY / PROVIDE
M.O. @ EACH LOCATION

REV.	DESCRIPTION	DATE	DWN	CHK
A	For Approval	7/23/10	TMc	TAN

ONE - LINTEL - 42L18

(3 ANGLES EACH LINTEL)

PHASE				
1	2	3	4	5
0	0	0	1	0

GENERAL NOTES

MATERIAL: A992 / A36
ELECTRODES: E70XX LH
REF. DRG.
HOLES: 13/16 DIA. U/N
CONN'S.: -
SURFACE PREP. AND PAINT: SSPC-SP-2 GREY PRIMER DEVOE NA-195 (U.N,)

JOB USE
SHOP
APPROVAL

DESCRIPTION: LINTEL
PROJECT NAME: Hamilton High School Phase III
LOCATION: Hamilton City School District - Hamilton
CONTRACTOR: GC Contracting

BILL OF MATERIAL

SHIP	MARK	NO PCS	DESCRIPTION	LENGTH	PIECE MARK	REMARKS
1	42L18	1	L6X3-1/2X5/16	6'-9"		SQ-2 A36 GALVANIZED
		2	L6X3-1/2X5/16	6'-9"	a219	A36 GALVANIZED

Avenue Fabricating Inc.
1281 Clough Pike
Batavia, OH 45103
(513) 752-1911

DRAWN BY	DATE	
TMc	07/23/2010	
CHKD. BY	DATE	
TAN		
JOB No.	DRG. No.	REV.
10-16	42L18	1

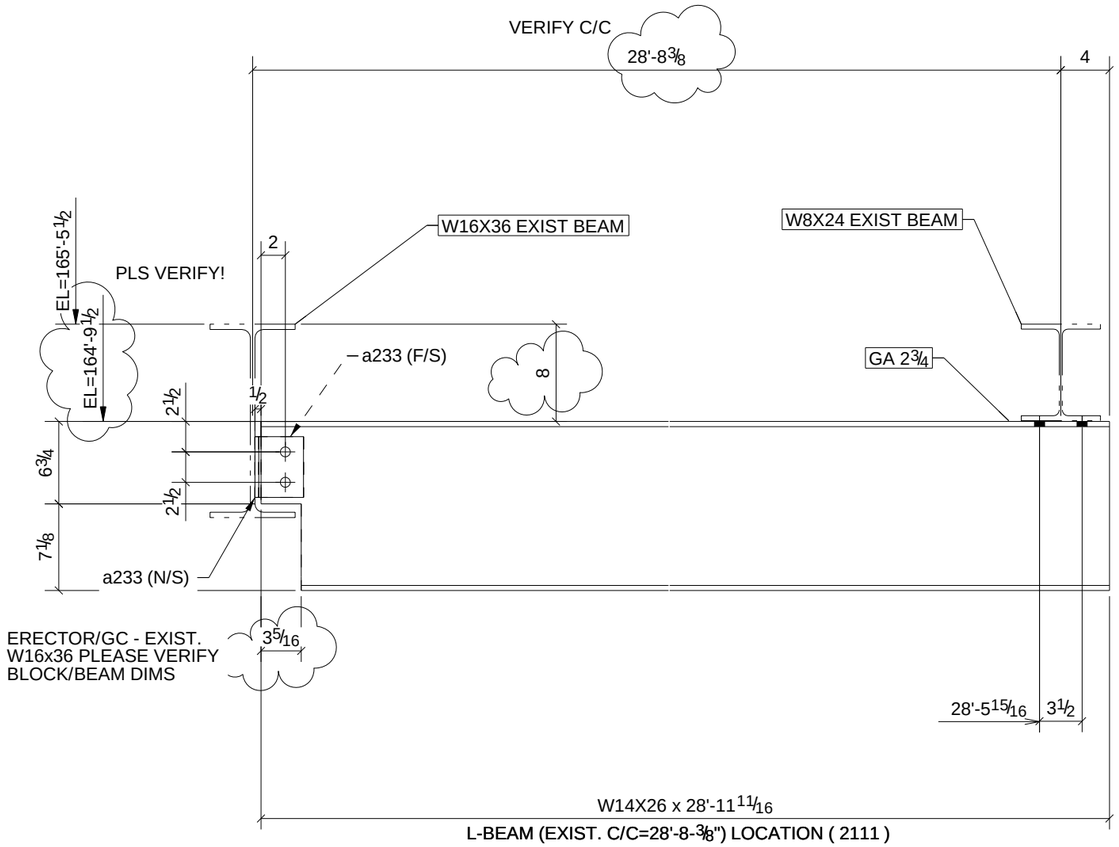

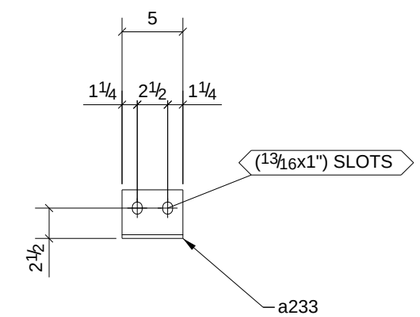

PHASE				
1	2	3	4	5
0	0	0	2	0

2 - LINTELS - 42L19

W	13 7/8"x1/4"
F	5"x7/16"

BILL OF MATERIAL

SHIP	MARK	NO PCS	DESCRIPTION	LENGTH	PIECE MARK	REMARKS
2	42L19	2	W14X26	28'-11 11/16"		SQ-2 A992
		4	L4X3-1/2X5/16	0'-5"	a233	A36
		4	3/4"Ø A325N BOLT	0'-2"		

REV.	DESCRIPTION	DATE	DWN	CHK
A	For Approval	7/23/10	TMc	TAN

GENERAL NOTES

MATERIAL: A992 / A36
ELECTRODES: E70XX LH
REF. DRG.
HOLES: 13/16 DIA. U/N
CONN'S.: -
SURFACE PREP. AND PAINT: SSPC-SP-2 GREY PRIMER DEVOE NA-195 (U.N,)

JOB USE
SHOP
APPROVAL

DESCRIPTION: LINTEL
PROJECT NAME: Hamilton High School Phase III
LOCATION: Hamilton City School District - Hamilton
CONTRACTOR: GC Contracting

Avenue Fabricating Inc.
1281 Clough Pike
Batavia, OH 45103
(513) 752-1911

DRAWN BY	DATE	
TMc	07/25/2010	
CHKD. BY	DATE	
TAN		
JOB No.	DRG. No.	REV.
10-16	42L19	1

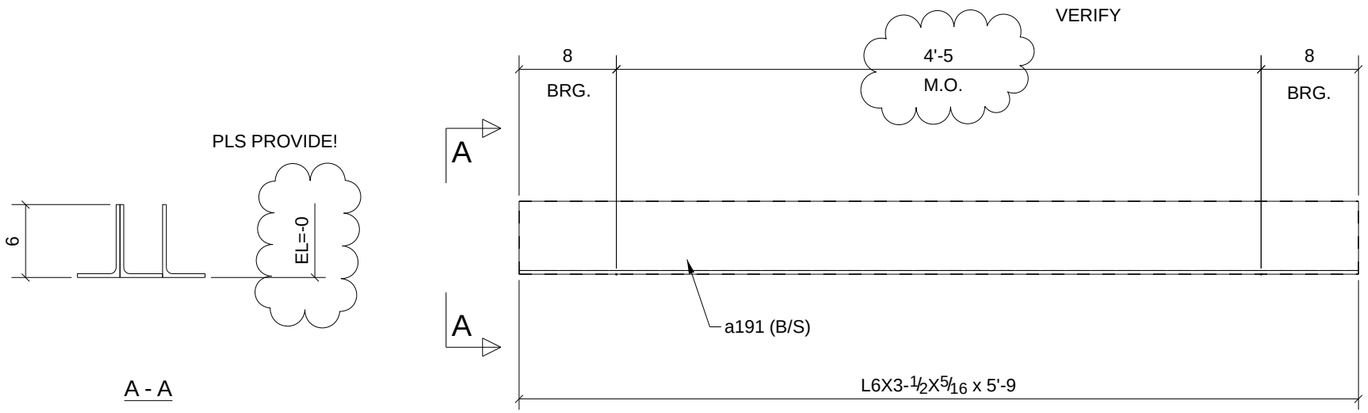

L-7 (M.O.=4'-5") LOCATION (2112)
(2104) (2X)

ARCH./ENG/OWNER
PLEASE VERIFY / PROVIDE
TYPE & LOCATIONS
ERECTOR / GC ~ PLEASE
VERIFY / PROVIDE
M.O. @ EACH LOCATION

REV.	DESCRIPTION	DATE	DWN	CHK
A	For Approval	7/23/10	TMc	TAN

4 - LINTELS - 42L2

(3 ANGLES EACH LINTEL)

PHASE				
1	2	3	4	5
0	0	0	4	0

GENERAL NOTES

MATERIAL: A992 / A36
ELECTRODES: E70XX LH
REF. DRG.
HOLES: 13/16 DIA. U/N
CONN'S.: -
SURFACE PREP. AND PAINT: SSPC-SP-2
GREY PRIMER DEVOE NA-195 (U.N,)

JOB USE
SHOP
APPROVAL

DESCRIPTION: LINTEL
PROJECT NAME: Hamilton High School Phase III
LOCATION: Hamilton City School District - Hamilton
CONTRACTOR: GC Contracting

BILL OF MATERIAL

SHIP	MARK	NO PCS	DESCRIPTION	LENGTH	PIECE MARK	REMARKS
4	42L2	4	L6X3-1/2X5/16	5'-9"		SQ-2 A36 GALVANIZED
		8	L6X3-1/2X5/16	5'-9"	a191	A36 GALVANIZED

Avenue Fabricating Inc.
1281 Clough Pike
Batavia, OH 45103
(513) 752-1911

DRAWN BY	DATE	
TMc	07/23/2010	
CHKD. BY	DATE	
TAN		
JOB No.	DRG. No.	REV.
10-16	42L2	1

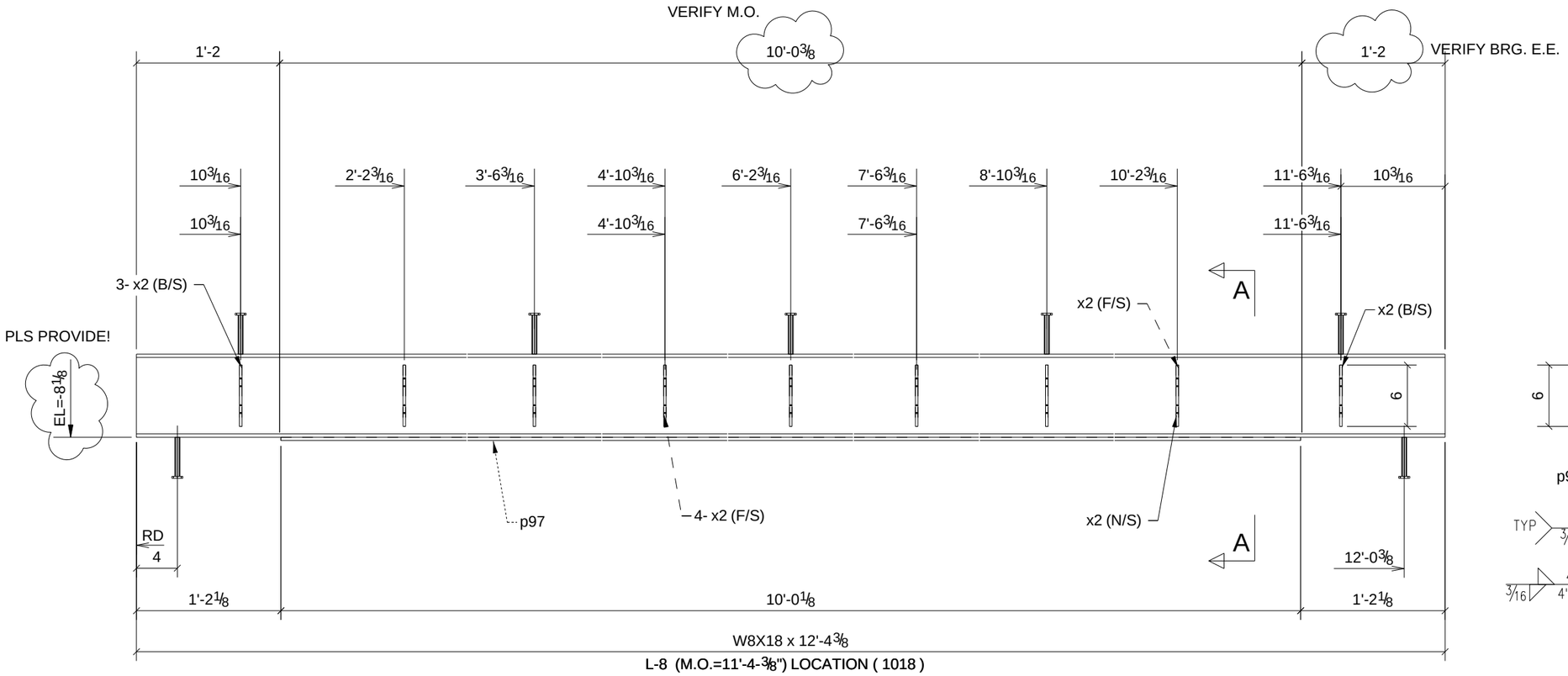

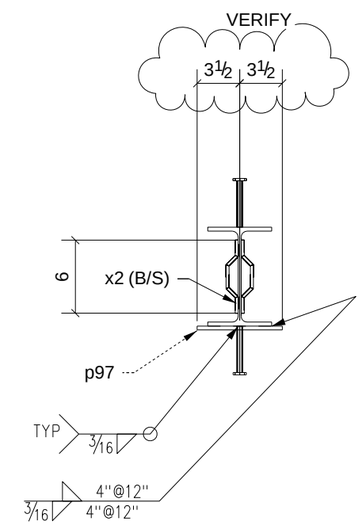

A - A

PHASE				
1	2	3	4	5
1	0	0	0	0

ONE - LINTEL - 42L3

W	8 1/8"x1/4"
F	5 1/4"x5/16"

REV.	DESCRIPTION	DATE	DWN	CHK
A	For Approval	7/20/10	TMc	TAN

GENERAL NOTES

MATERIAL: A992 / A36
ELECTRODES: E70XX LH
REF. DRG.
HOLES: 13/16 DIA. U/N
CONN'S.: -
SURFACE PREP. AND PAINT: SSPC-SP-2 GREY PRIMER DEVOE NA-195 (U.N,)

JOB USE
SHOP
APPROVAL

DESCRIPTION: LINTEL
PROJECT NAME: Hamilton High School Phase III
LOCATION: Hamilton City School District - Hamilton
CONTRACTOR: GC Contracting

BILL OF MATERIAL

SHIP	MARK	NO PCS	DESCRIPTION	LENGTH	PIECE MARK	REMARKS
1	42L3	1	W8X18	12'-4 3/8"		SQ-2 A992 -
		1	BAR5/16"X7"	10'-0 1/8"	p97	A36 GALVANIZED
		18	H&B #359	0'-6 3/16"	x2	A36
		7	STUD 1/2" DIA	0'-4"		

Avenue Fabricating Inc.
1281 Clough Pike
Batavia, OH 45103
(513) 752-1911

DRAWN BY	DATE	
TMc	07/20/2010	
CHKD. BY	DATE	
TAN		
JOB No.	DRG. No.	REV.
10-16	42L3	1

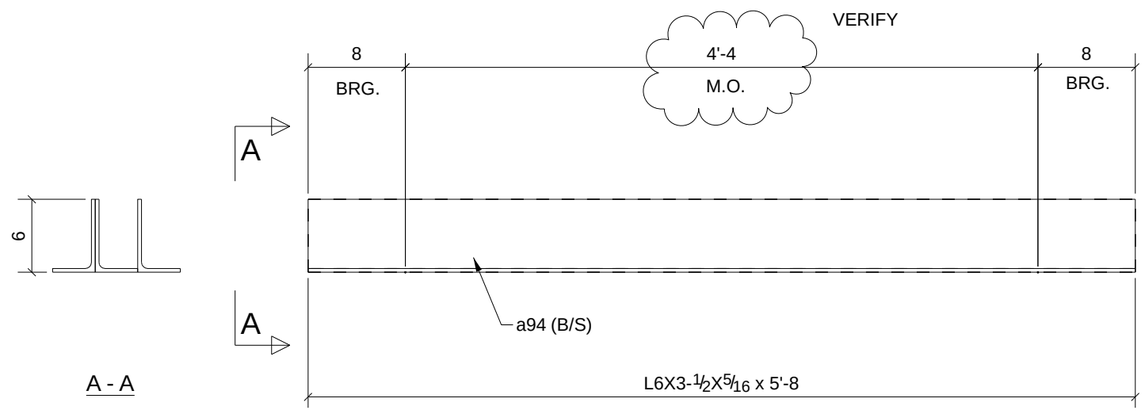

L-7 (M.O.=4'-4") LOCATION (1158)

ARCH./ENG/OWNER
PLEASE VERIFY / PROVIDE
TYPE & LOCATIONS
ERECTOR / GC ~ PLEASE
VERIFY / PROVIDE
M.O. @ EACH LOCATION

REV.	DESCRIPTION	DATE	DWN	CHK
A	For Approval	7/20/10	TMc	TAN

PHASE				
1	2	3	4	5
0	0	0	0	1

ONE - LINTEL - 42L4

(3 ANGLES EACH LINTEL)

GENERAL NOTES

MATERIAL: A992 / A36
ELECTRODES: E70XX LH
REF. DRG.
HOLES: 13/16 DIA. U/N
CONN'S.: -
SURFACE PREP. AND PAINT: SSPC-SP-2 GREY PRIMER DEVOE NA-195 (U.N,)

JOB USE
SHOP
APPROVAL

DESCRIPTION: LINTEL
PROJECT NAME: Hamilton High School Phase III
LOCATION: Hamilton City School District - Hamilton
CONTRACTOR: GC Contracting

BILL OF MATERIAL

SHIP	MARK	NO PCS	DESCRIPTION	LENGTH	PIECE MARK	REMARKS
1	42L4	1	L6X3-1/2X5/16	5'-8"		SQ-2 A36 GALVANIZED
		2	L6X3-1/2X5/16	5'-8"	a94	A36 GALVANIZED

Avenue Fabricating Inc.
1281 Clough Pike
Batavia, OH 45103
(513) 752-1911

DRAWN BY	DATE	
TMc	07/20/2010	
CHKD. BY	DATE	
TAN		
JOB No.	DRG. No.	REV.
10-16	42L4	1

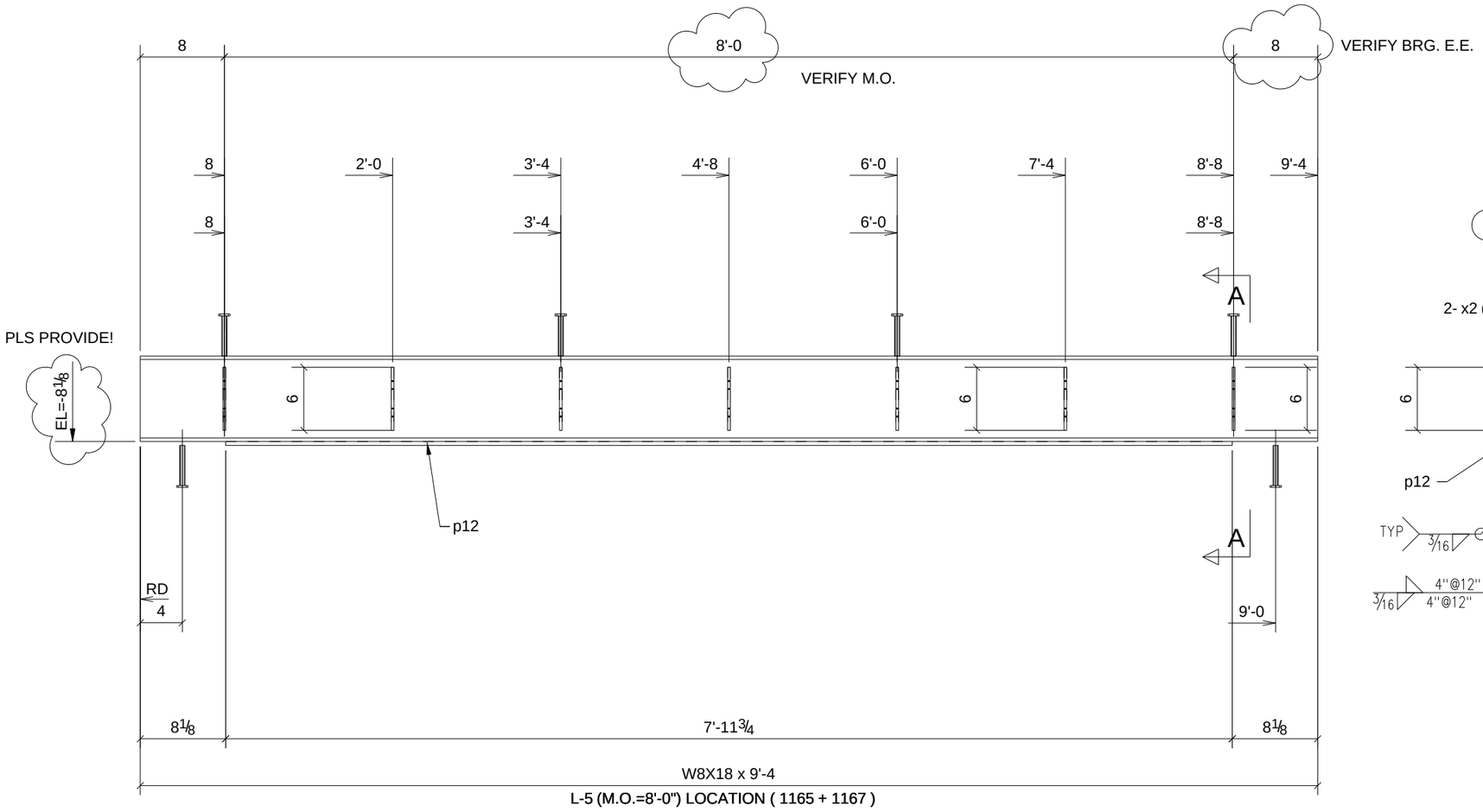

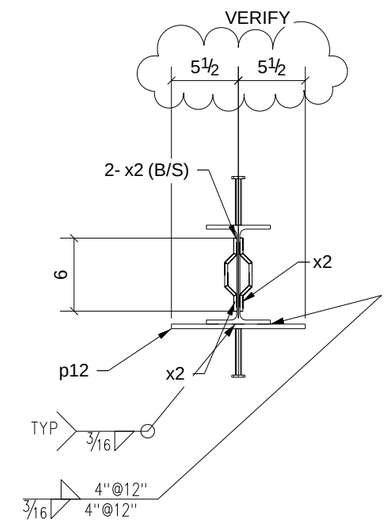

A - A

2 - LINTELS - 42L5

PHASE				
1	2	3	4	5
0	0	0	2	0

W	8 1/8"x1/4"
F	5 1/4"x5/16"

REV.	DESCRIPTION	DATE	DWN	CHK
A	For Approval	7/20/10	TMc	TAN

GENERAL NOTES

MATERIAL: A992 / A36
ELECTRODES: E70XX LH
REF. DRG.
HOLES: 13/16 DIA. U/N
CONN'S.: -
SURFACE PREP. AND PAINT: SSPC-SP-2 GREY PRIMER DEVOE NA-195 (U.N,)

JOB USE
SHOP
APPROVAL

DESCRIPTION: LINTEL
PROJECT NAME: Hamilton High School Phase III
LOCATION: Hamilton City School District - Hamilton
CONTRACTOR: GC Contracting

BILL OF MATERIAL

SHIP	MARK	NO PCS	DESCRIPTION	LENGTH	PIECE MARK	REMARKS
2	42L5	2	W8X18	9'-4"		SQ-2 A992 GALVANIZED
		2	BAR3/8"X11"	7'-11 3/4"	p12	A36 GALVANIZED
		28	H&B #359	0'-6 3/16"	x2	A36
		12	STUD 1/2" DIA	0'-4"		

Avenue Fabricating Inc.
1281 Clough Pike
Batavia, OH 45103
(513) 752-1911

DRAWN BY	DATE	
TMc	07/19/2010	
CHKD. BY	DATE	
TAN		
JOB No.	DRG. No.	REV.
10-16	42L5	1

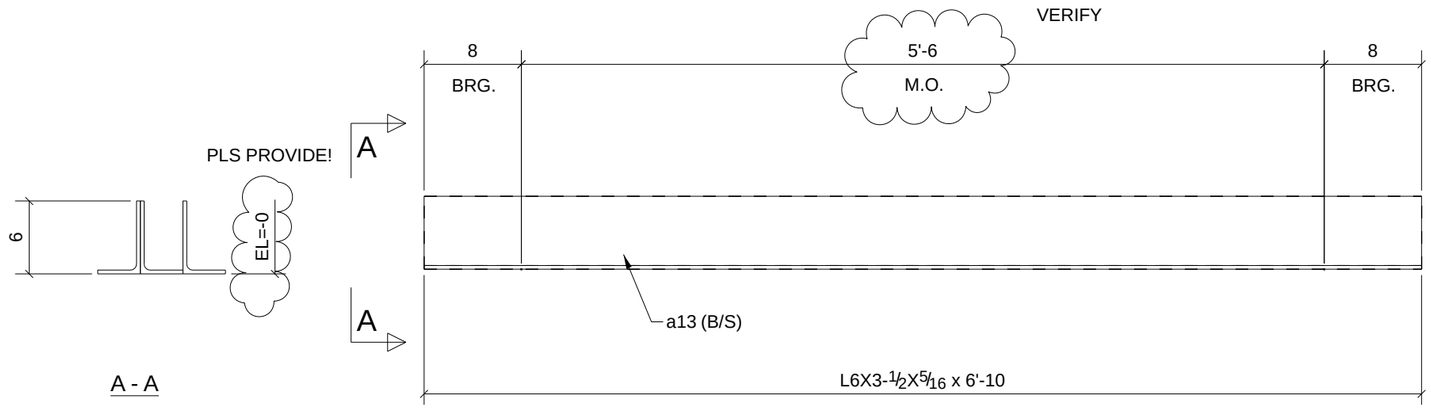

L-7 (M.O.=5'-5") LOCATION (2108)

(2102)

ARCH./ENG/OWNER
PLEASE VERIFY / PROVIDE
TYPE & LOCATIONS
ERECTOR / GC ~ PLEASE
VERIFY / PROVIDE
M.O. @ EACH LOCATION

REV.	DESCRIPTION	DATE	DWN	CHK
A	For Approval	7/23/10	TMc	TAN

2 - LINTELS - 42L6

(3 ANGLES EACH LINTEL)

PHASE				
1	2	3	4	5
0	0	0	2	0

GENERAL NOTES

MATERIAL: A992 / A36
ELECTRODES: E70XX LH
REF. DRG.
HOLES: 13/16 DIA. U/N
CONN'S.: -
SURFACE PREP. AND PAINT: SSPC-SP-2 GREY PRIMER DEVOE NA-195 (U.N,)

JOB USE
SHOP
APPROVAL

DESCRIPTION: LINTEL

PROJECT NAME: Hamilton High School Phase III
LOCATION: Hamilton City School District - Hamilton

CONTRACTOR: GC Contracting

BILL OF MATERIAL

SHIP	MARK	NO PCS	DESCRIPTION	LENGTH	PIECE MARK	REMARKS
2	42L6	2	L6X3-1/2X5/16	6'-10"		SQ-2 A36 GALVANIZED
		4	L6X3-1/2X5/16	6'-10"	a13	A36 GALVANIZED

Avenue Fabricating Inc.
1281 Clough Pike
Batavia, OH 45103
(513) 752-1911

DRAWN BY	DATE	
TMc	07/23/2010	
CHKD. BY	DATE	
TAN		
JOB No.	DRG. No.	REV.
10-16	42L6	1

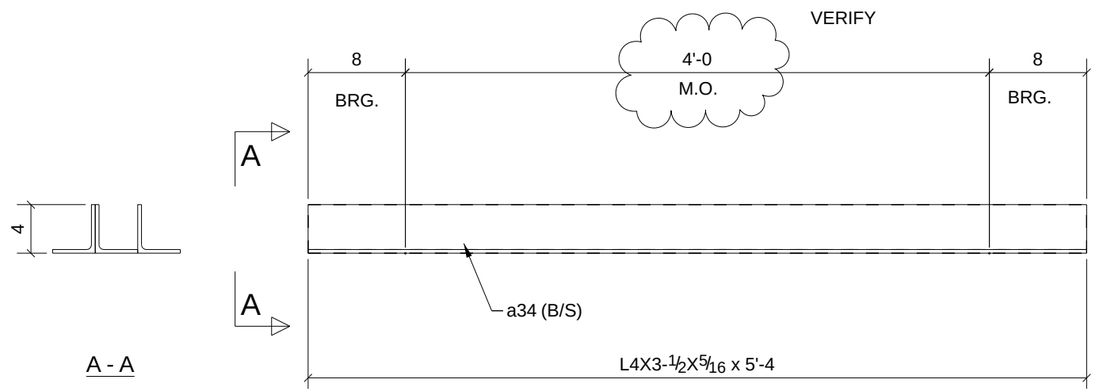

L-3 (M.O.=3'-4") LOCATION (1157B)

ARCH./ENG/OWNER
PLEASE VERIFY / PROVIDE
TYPE & LOCATIONS
ERECTOR / GC ~ PLEASE
VERIFY / PROVIDE
M.O. @ EACH LOCATION

REV.	DESCRIPTION	DATE	DWN	CHK
A	For Approval	7/20/10	TMc	TAN

ONE - LINTEL - 42L7

(3 ANGLES EACH LINTEL)

PHASE				
1	2	3	4	5
0	0	1	0	0

GENERAL NOTES

MATERIAL: A992 / A36
ELECTRODES: E70XX LH
REF. DRG.
HOLES: 13/16 DIA. U/N
CONN'S.: -
SURFACE PREP. AND PAINT: SSPC-SP-2
GREY PRIMER DEVOE NA-195 (U.N,)

JOB USE
SHOP
APPROVAL

DESCRIPTION: LINTEL
PROJECT NAME: Hamilton High School Phase III
LOCATION: Hamilton City School District - Hamilton
CONTRACTOR: GC Contracting

BILL OF MATERIAL

SHIP	MARK	NO PCS	DESCRIPTION	LENGTH	PIECE MARK	REMARKS
1	42L7	1	L4X3-1/2X5/16	5'-4"		SQ-2 A36 GALVANIZED
		2	L4X3-1/2X5/16	5'-4"	a34	A36 GALVANIZED

Avenue Fabricating Inc.
1281 Clough Pike
Batavia, OH 45103
(513) 752-1911

DRAWN BY	DATE	
TMc	07/20/2010	
CHKD. BY	DATE	
TAN		
JOB No.	DRG. No.	REV.
10-16	42L7	1

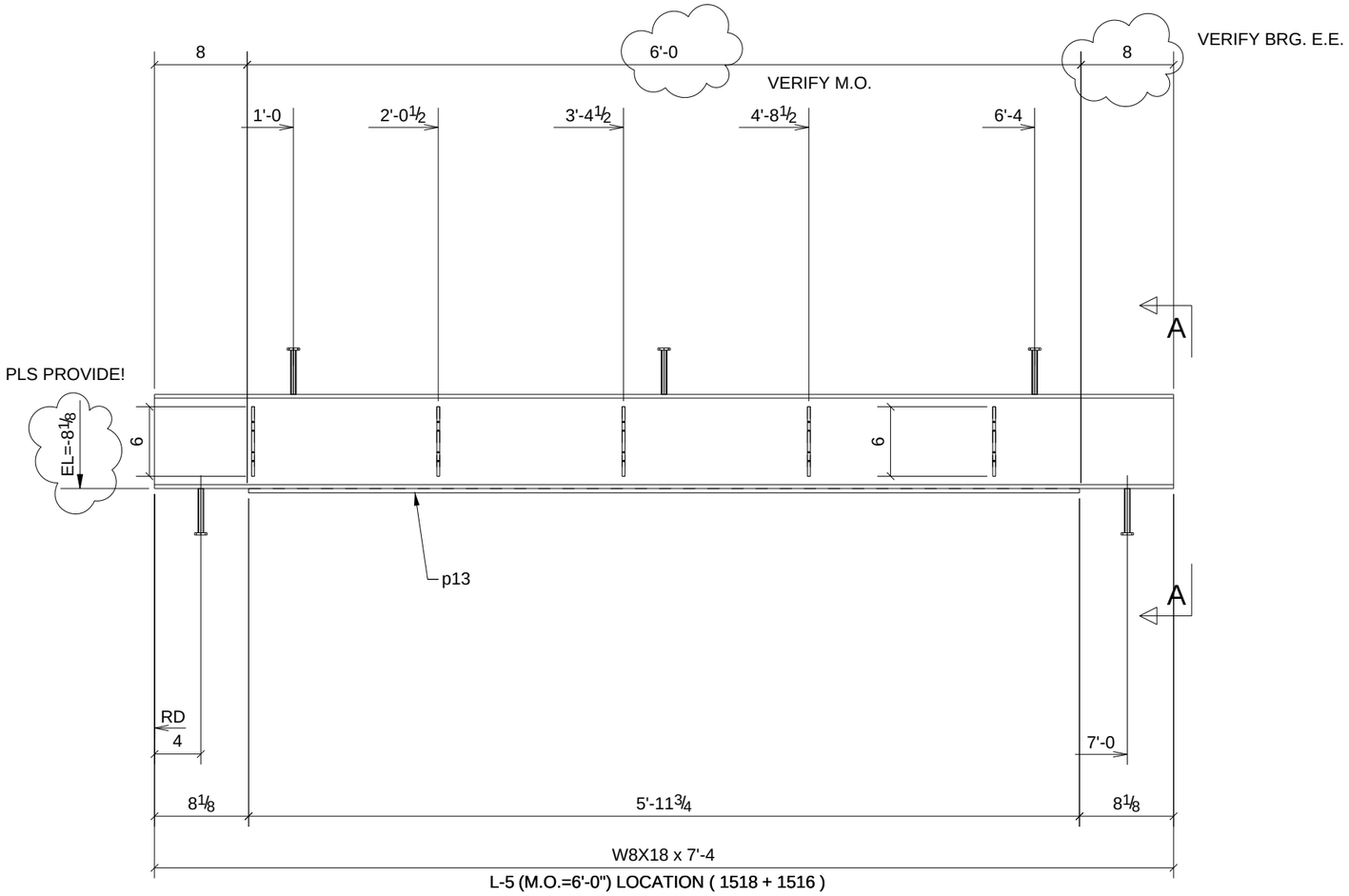

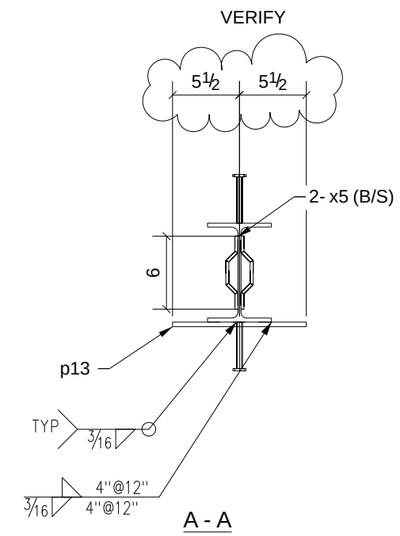

2 - LINTELS - 42L8

PHASE				
1	2	3	4	5
0	0	0	2	0

W	8 1/8"x1/4"
F	5 1/4"x5/16"

REV.	DESCRIPTION	DATE	DWN	CHK
A	For Approval	7/20/10	TMc	TAN

GENERAL NOTES

MATERIAL: A992 / A36	ELECTRODES: E70XX LH	REF. DRG.	JOB USE
HOLES: 13/16 DIA. U/N	CONN'S.: -		SHOP
SURFACE PREP. AND PAINT: SSPC-SP-2 GREY PRIMER DEVOE NA-195 (U.N,)			APPROVAL

DESCRIPTION: LINTEL

PROJECT NAME: Hamilton High School Phase III

LOCATION: Hamilton City School District - Hamilton

CONTRACTOR: GC Contracting

BILL OF MATERIAL

SHIP	MARK	NO PCS	DESCRIPTION	LENGTH	PIECE MARK	REMARKS
2	42L8	2	W8X18	7'-4"		SQ-2 A992 GALVANIZED
		2	BAR3/8"X11"	5'-11 3/4"	p13	A36 GALVANIZED
		20	H&B #359	0'-6 3/16"	x5	A36 GALVANIZED
		10	STUD 1/2" DIA	0'-4"		

Avenue Fabricating Inc.
1281 Clough Pike
Batavia, OH 45103
(513) 752-1911

DRAWN BY TMc	DATE 07/19/2010		
CHKD. BY TAN	DATE		
JOB No. 10-16	DRG. No. 42L8	REV. 1	

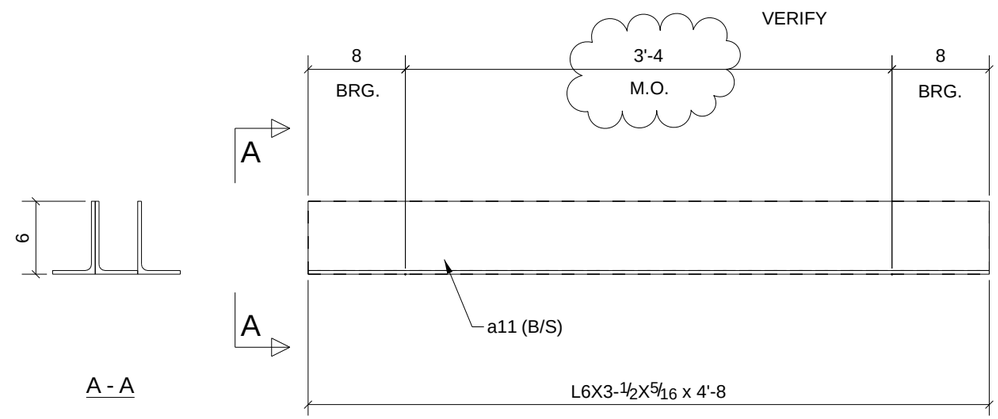

L-7 (M.O.=3'-4") LOCATION (1515)
(1116)
(1117)
(1118)
(1119)

ARCH./ENG/OWNER
PLEASE VERIFY / PROVIDE
TYPE & LOCATIONS
ERECTOR / GC ~ PLEASE
VERIFY / PROVIDE
M.O. @ EACH LOCATION

REV.	DESCRIPTION	DATE	DWN	CHK
A	For Approval	7/20/10	TMc	TAN

PHASE				
1	2	3	4	5
0	0	0	5	0

5 - LINTELS - 42L9

(3 ANGLES EACH LINTEL)

GENERAL NOTES

MATERIAL: A992 / A36
ELECTRODES: E70XX LH
REF. DRG.
HOLES: 13/16 DIA. U/N
CONN'S.: -
SURFACE PREP. AND PAINT: SSPC-SP-2 GREY PRIMER DEVOE NA-195 (U.N,)

JOB USE
SHOP
APPROVAL

DESCRIPTION: LINTEL
PROJECT NAME: Hamilton High School Phase III
LOCATION: Hamilton City School District - Hamilton
CONTRACTOR: GC Contracting

BILL OF MATERIAL

SHIP	MARK	NO PCS	DESCRIPTION	LENGTH	PIECE MARK	REMARKS
5	42L9	5	L6X3-1/2X5/16	4'-8"		SQ-2 A36 1 S/C STD PRIMER
		10	L6X3-1/2X5/16	4'-8"	a11	A36 1 S/C STD PRIMER

Avenue Fabricating Inc.
1281 Clough Pike
Batavia, OH 45103
(513) 752-1911

DRAWN BY	DATE	
TMc	07/20/2010	
CHKD. BY	DATE	
TAN		
JOB No.	DRG. No.	REV.
10-16	42L9	1

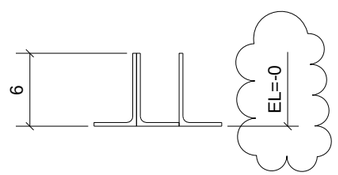

A - A

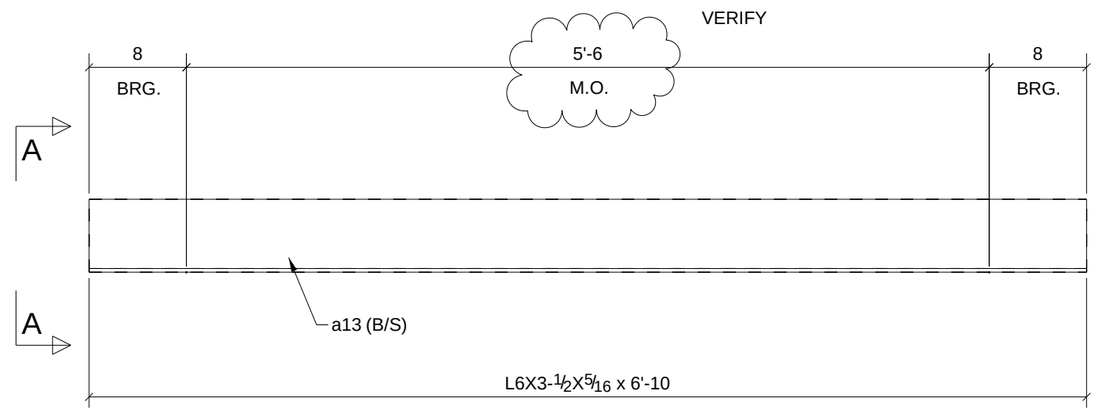

L-7 (M.O.=5'-6") LOCATION (1102) (2X)
(1110)
(1128A)
(2101)
(2107(2X))
2113

ARCH./ENG/OWNER
PLEASE VERIFY / PROVIDE
TYPE & LOCATIONS
ERECTOR / GC ~ PLEASE
VERIFY / PROVIDE
M.O. @ EACH LOCATION

REV.	DESCRIPTION	DATE	DWN	CHK
A	For Approval	7/20/10	TMc	TAN

PHASE				
1	2	3	4	5
0	0	0	0	8

8 - LINTELS - 52L1

(3 ANGLES EACH LINTEL)

GENERAL NOTES

MATERIAL: A992 / A36
ELECTRODES: E70XX LH
REF. DRG.
HOLES: 13/16 DIA. U/N
CONN'S.: -
SURFACE PREP. AND PAINT: SSPC-SP-2 GREY PRIMER DEVOE NA-195 (U.N,)

JOB USE
SHOP
APPROVAL

DESCRIPTION: LINTEL
PROJECT NAME: Hamilton High School Phase III
LOCATION: Hamilton City School District - Hamilton
CONTRACTOR: GC Contracting

BILL OF MATERIAL

SHIP	MARK	NO PCS	DESCRIPTION	LENGTH	PIECE MARK	REMARKS
8	52L1	8	L6X3-1/2X5/16	6'-10"		SQ-2 A36 GALVANIZED
		16	L6X3-1/2X5/16	6'-10"	a13	A36 GALVANIZED

Avenue Fabricating Inc.
1281 Clough Pike
Batavia, OH 45103
(513) 752-1911

DRAWN BY TMc	DATE 07/20/2010
CHKD. BY TAN	DATE
JOB No. 10-16	DRG. No. 52L1 / REV. 1

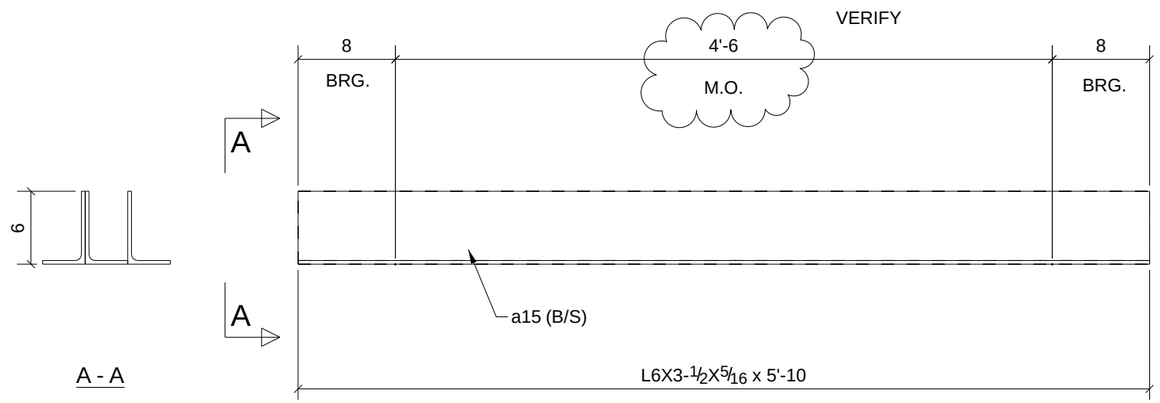

L-7 (M.O.=4'-6") LOCATION (1112)

(1105) (2X)

ARCH./ENG/OWNER
PLEASE VERIFY / PROVIDE
TYPE & LOCATIONS
ERECTOR / GC ~ PLEASE
VERIFY / PROVIDE
M.O. @ EACH LOCATION

REV.	DESCRIPTION	DATE	DWN	CHK
A	For Approval	7/20/10	TMc	TAN

3 - LINTELS - 52L2

(3 ANGLES EACH LINTEL)

PHASE				
1	2	3	4	5
0	0	0	0	3

GENERAL NOTES

MATERIAL: A992 / A36
ELECTRODES: E70XX LH
REF. DRG.
HOLES: 13/16 DIA. U/N
CONN'S.: -
SURFACE PREP. AND PAINT: SSPC-SP-2 GREY PRIMER DEVOE NA-195 (U.N,)

JOB USE
SHOP
APPROVAL

DESCRIPTION: LINTEL

PROJECT NAME: Hamilton High School Phase III
LOCATION: Hamilton City School District - Hamilton

CONTRACTOR: GC Contracting

BILL OF MATERIAL

SHIP	MARK	NO PCS	DESCRIPTION	LENGTH	PIECE MARK	REMARKS
3	52L2	3	L6X3-1/2X5/16	5'-10"		SQ-2 A36 GALVANIZED
		6	L6X3-1/2X5/16	5'-10"	a15	A36 GALVANIZED

Avenue Fabricating Inc.
1281 Clough Pike
Batavia, OH 45103
(513) 752-1911

DRAWN BY TMc	DATE 07/20/2010		
CHKD. BY TAN	DATE		
JOB No. 10-16	DRG. No. 52L2	REV. 1	

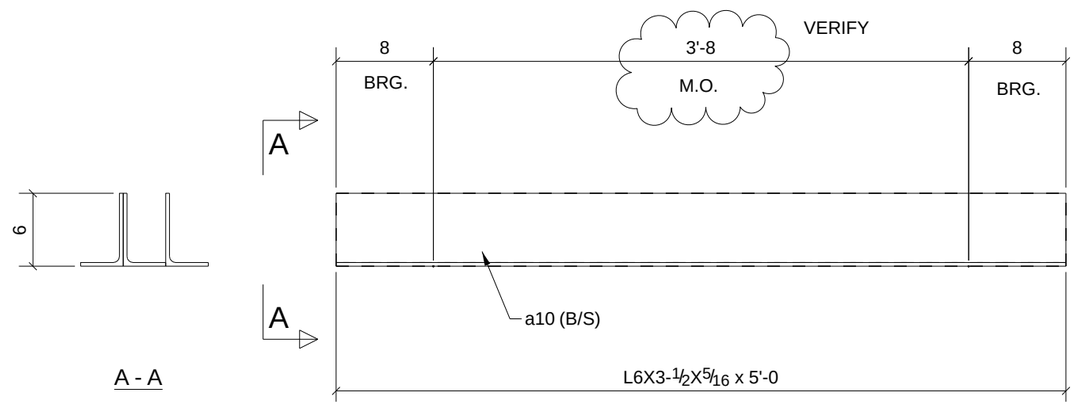

L-7 (M.O.=3'-8") LOCATION (1110) (2X)

ARCH./ENG/OWNER
PLEASE VERIFY / PROVIDE
TYPE & LOCATIONS
ERECTOR / GC ~ PLEASE
VERIFY / PROVIDE
M.O. @ EACH LOCATION

REV.	DESCRIPTION	DATE	DWN	CHK
A	For Approval	7/20/10	TMc	TAN

2 - LINTELS - 52L3

(3 ANGLES EACH LINTEL)

PHASE				
1	2	3	4	5
0	0	0	0	2

GENERAL NOTES

MATERIAL: A992 / A36
ELECTRODES: E70XX LH
REF. DRG.
HOLES: 13/16 DIA. U/N
CONN'S.: -
SURFACE PREP. AND PAINT: SSPC-SP-2 GREY PRIMER DEVOE NA-195 (U.N,)

JOB USE
SHOP
APPROVAL

DESCRIPTION: LINTEL
PROJECT NAME: Hamilton High School Phase III
LOCATION: Hamilton City School District - Hamilton
CONTRACTOR: GC Contracting

BILL OF MATERIAL

SHIP	MARK	NO PCS	DESCRIPTION	LENGTH	PIECE MARK	REMARKS
2	52L3	2	L6X3-1/2X5/16	5'-0"		SQ-2 A36 GALVANIZED
		4	L6X3-1/2X5/16	5'-0"	a10	A36 GALVANIZED

Avenue Fabricating Inc.
1281 Clough Pike
Batavia, OH 45103
(513) 752-1911

DRAWN BY TMc	DATE 07/20/2010		
CHKD. BY TAN	DATE		
JOB No. 10-16	DRG. No. 52L3	REV. 1	

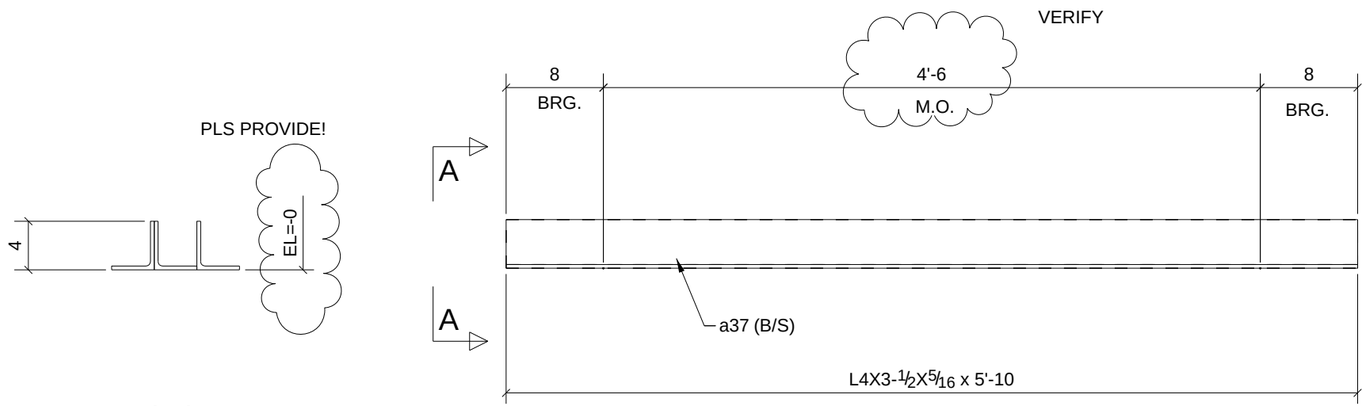

A - A

L-3 (M.O.=4'-6") LOCATION (1110)

ARCH./ENG/OWNER
PLEASE VERIFY / PROVIDE
TYPE & LOCATIONS
ERECTOR / GC ~ PLEASE
VERIFY / PROVIDE
M.O. @ EACH LOCATION

REV.	DESCRIPTION	DATE	DWN	CHK
A	For Approval	7/20/10	TMc	TAN

ONE - LINTEL - 52L4

(3 ANGLES EACH LINTEL)

PHASE				
1	2	3	4	5
0	0	0	0	1

GENERAL NOTES

MATERIAL: A992 / A36
ELECTRODES: E70XX LH
REF. DRG.
HOLES: 13/16 DIA. U/N
CONN'S.: -
SURFACE PREP. AND PAINT: SSPC-SP-2 GREY PRIMER DEVOE NA-195 (U.N,)

JOB USE
SHOP
APPROVAL

DESCRIPTION: LINTEL
PROJECT NAME: Hamilton High School Phase III
LOCATION: Hamilton City School District - Hamilton
CONTRACTOR: GC Contracting

BILL OF MATERIAL

SHIP	MARK	NO PCS	DESCRIPTION	LENGTH	PIECE MARK	REMARKS
1	52L4	1	L4X3-1/2X5/16	5'-10"		SQ-2 A36 GALVANIZED
		2	L4X3-1/2X5/16	5'-10"	a37	A36 GALVANIZED

Avenue Fabricating Inc.
1281 Clough Pike
Batavia, OH 45103
(513) 752-1911

DRAWN BY TMc	DATE 07/20/2010		
CHKD. BY TAN	DATE		
JOB No. 10-16	DRG. No. 52L4	REV. 1	

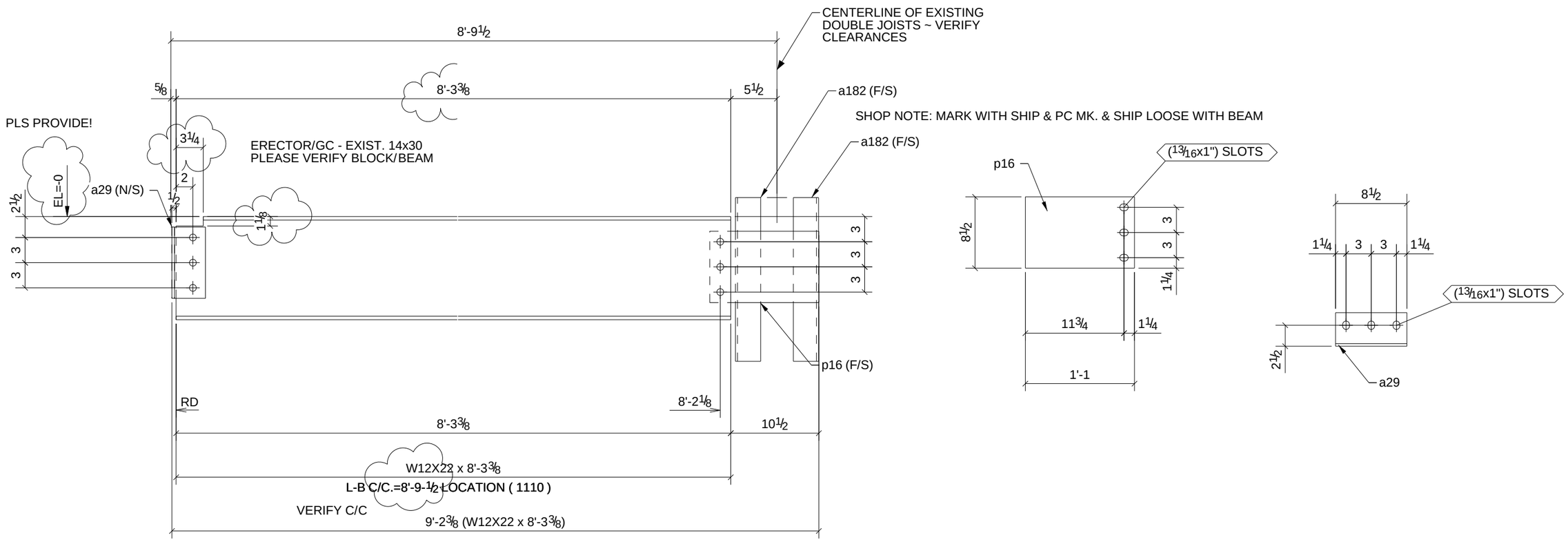

ONE - LINTEL - 52L5

PHASE				
1	2	3	4	5
1	0	0	0	0

W	12 5/16"x1/4"
F	4"x7/16"

REV.	DESCRIPTION	DATE	DWN	CHK
A	For Approval	7/20/10	TMc	TAN

GENERAL NOTES

MATERIAL: A992 / A36
ELECTRODES: E70XX LH
REF. DRG.
HOLES: 13/16 DIA. U/N
CONN'S.: -
SURFACE PREP. AND PAINT: SSPC-SP-2 GREY PRIMER DEVOE NA-195 (U.N,)

JOB USE
SHOP
APPROVAL

BILL OF MATERIAL

SHIP	MARK	NO PCS	DESCRIPTION	LENGTH	PIECE MARK	REMARKS
1	52L5	1	W12X22	8'-3 3/8"		SQ-2 A992 -
		1	L4X3-1/2X5/16	0'-8 1/2"	a29	A36
		2	L3X3X1/4	1'-7 1/2"	a182	A36
		1	BAR3/8"X8 1/2"	1'-1"	p16	A36
		6	3/4"Ø A325N BOLT	0'-1 3/4"		

DESCRIPTION: LINTEL
PROJECT NAME: Hamilton High School Phase III
LOCATION: Hamilton City School District - Hamilton
CONTRACTOR: GC Contracting

Avenue Fabricating Inc.
1281 Clough Pike
Batavia, OH 45103
(513) 752-1911

DRAWN BY	DATE	
TMc	07/20/2010	
CHKD. BY	DATE	
TAN		
JOB No.	DRG. No.	REV.
10-16	52L5	1

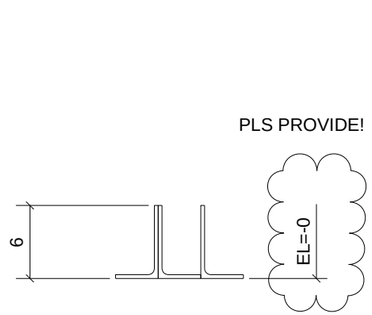

A - A

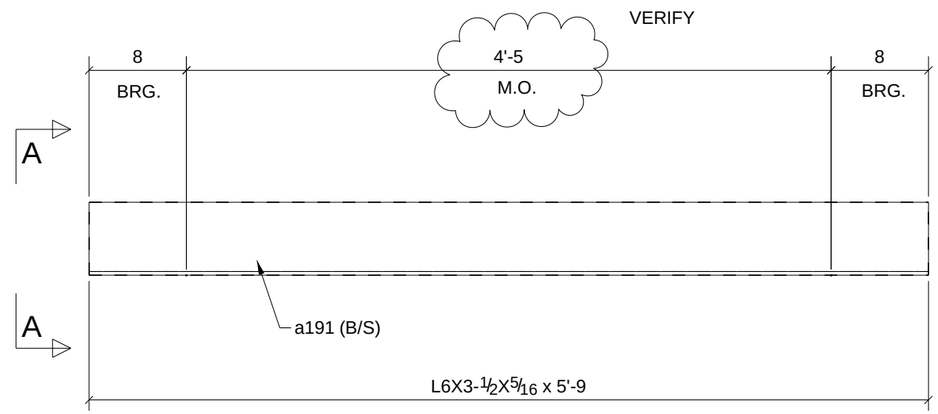

L-7 (M.O.=4'-5") LOCATION (2103) (2X)

ARCH./ENG/OWNER
PLEASE VERIFY / PROVIDE
TYPE & LOCATIONS
ERECTOR / GC ~ PLEASE
VERIFY / PROVIDE
M.O. @ EACH LOCATION

REV.	DESCRIPTION	DATE	DWN	CHK
A	For Approval	7/23/10	TMc	TAN

PHASE				
1	2	3	4	5
0	0	0	0	2

2 - LINTELS - 52L6

(3 ANGLES EACH LINTEL)

GENERAL NOTES

MATERIAL: A992 / A36
ELECTRODES: E70XX LH
REF. DRG.
HOLES: 13/16 DIA. U/N
CONN'S.: -
SURFACE PREP. AND PAINT: SSPC-SP-2 GREY PRIMER DEVOE NA-195 (U.N,)

JOB USE
SHOP
APPROVAL

DESCRIPTION: LINTEL
PROJECT NAME: Hamilton High School Phase III
LOCATION: Hamilton City School District - Hamilton
CONTRACTOR: GC Contracting

BILL OF MATERIAL

SHIP	MARK	NO PCS	DESCRIPTION	LENGTH	PIECE MARK	REMARKS
2	52L6	2	L6X3-1/2X5/16	5'-9"		SQ-2 A36 GALVANIZED
		4	L6X3-1/2X5/16	5'-9"	a191	A36 GALVANIZED

Avenue Fabricating Inc.
1281 Clough Pike
Batavia, OH 45103
(513) 752-1911

DRAWN BY TMc	DATE 07/23/2010
CHKD. BY TAN	DATE
JOB No. 10-16	DRG. No. 52L6 REV. 1

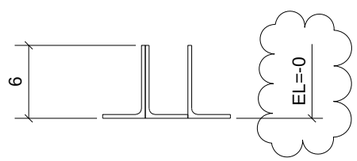

A - A

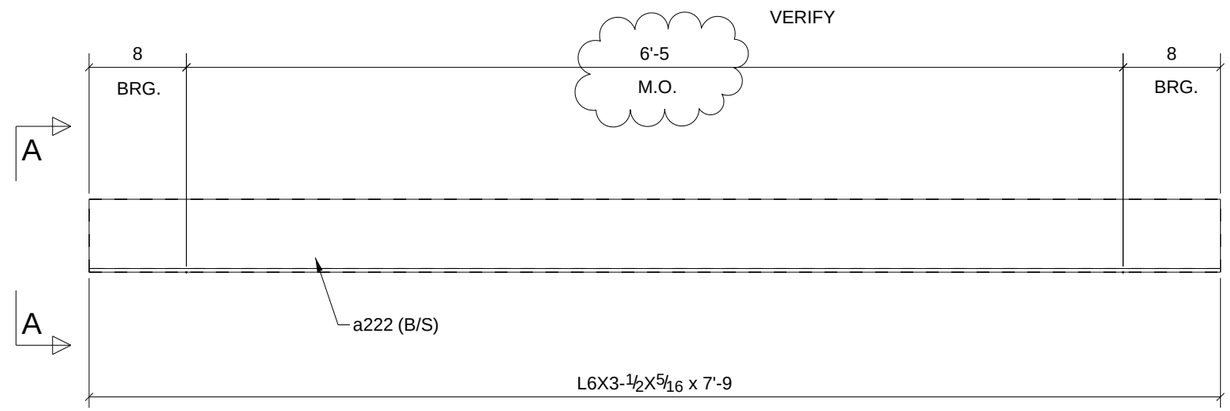

L-7 (M.O.=6'-5") LOCATION (2114)
(2118)

ARCH./ENG/OWNER
PLEASE VERIFY / PROVIDE
TYPE & LOCATIONS
ERECTOR / GC ~ PLEASE
VERIFY / PROVIDE
M.O. @ EACH LOCATION

REV.	DESCRIPTION	DATE	DWN	CHK
A	For Approval	7/23/10	TMc	TAN

PHASE				
1	2	3	4	5
0	0	0	0	2

2 - LINTELS - 52L7

(3 ANGLES EACH LINTEL)

GENERAL NOTES

MATERIAL: A992 / A36
ELECTRODES: E70XX LH
REF. DRG.
HOLES: 13/16 DIA. U/N
CONN'S.: -
SURFACE PREP. AND PAINT: SSPC-SP-2
GREY PRIMER DEVOE NA-195 (U.N,)

JOB USE
SHOP
APPROVAL

DESCRIPTION: LINTEL
PROJECT NAME: Hamilton High School Phase III
LOCATION: Hamilton City School District - Hamilton
CONTRACTOR: GC Contracting

BILL OF MATERIAL

SHIP	MARK	NO PCS	DESCRIPTION	LENGTH	PIECE MARK	REMARKS
2	52L7	2	L6X3-1/2X5/16	7'-9"		SQ-2 A36 GALVANIZED
		4	L6X3-1/2X5/16	7'-9"	a222	A36 GALVANIZED

Avenue Fabricating Inc.
1281 Clough Pike
Batavia, OH 45103
(513) 752-1911

DRAWN BY: TMc	DATE: 07/23/2010		
CHKD. BY: TAN	DATE:		
JOB No.: 10-16	DRG. No.: 52L7	REV.: 1	

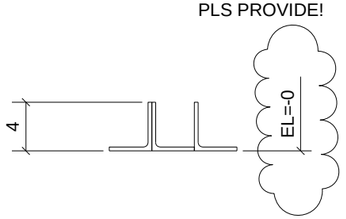

A - A

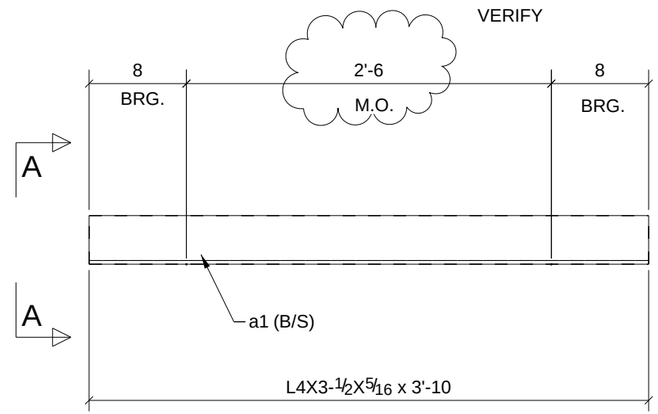

L-3 (M.O.=2'-6") LOCATION (2106)

ARCH./ENG/OWNER
PLEASE VERIFY / PROVIDE
TYPE & LOCATIONS
ERECTOR / GC ~ PLEASE
VERIFY / PROVIDE
M.O. @ EACH LOCATION

REV.	DESCRIPTION	DATE	DWN	CHK
A	For Approval	7/23/10	TMc	TAN

PHASE				
1	2	3	4	5
0	0	0	0	1

ONE - LINTEL - 52L8

(3 ANGLES EACH LINTEL)

GENERAL NOTES

MATERIAL: A992 / A36
ELECTRODES: E70XX LH
REF. DRG.
HOLES: 13/16 DIA. U/N
CONN'S.: -
SURFACE PREP. AND PAINT: SSPC-SP-2 GREY PRIMER DEVOE NA-195 (U.N,)

JOB USE
SHOP
APPROVAL

DESCRIPTION: LINTEL
PROJECT NAME: Hamilton High School Phase III
LOCATION: Hamilton City School District - Hamilton
CONTRACTOR: GC Contracting

BILL OF MATERIAL

SHIP	MARK	NO PCS	DESCRIPTION	LENGTH	PIECE MARK	REMARKS
1	52L8	1	L4X3-1/2X5/16	3'-10"		SQ-2 A36 GALVANIZED
		2	L4X3-1/2X5/16	3'-10"	a1	A36 GALVANIZED

Avenue Fabricating Inc.
1281 Clough Pike
Batavia, OH 45103
(513) 752-1911

DRAWN BY	DATE	
TMc	07/26/2010	
CHKD. BY	DATE	
TAN		
JOB No.	DRG. No.	REV.
10-16	52L8	1

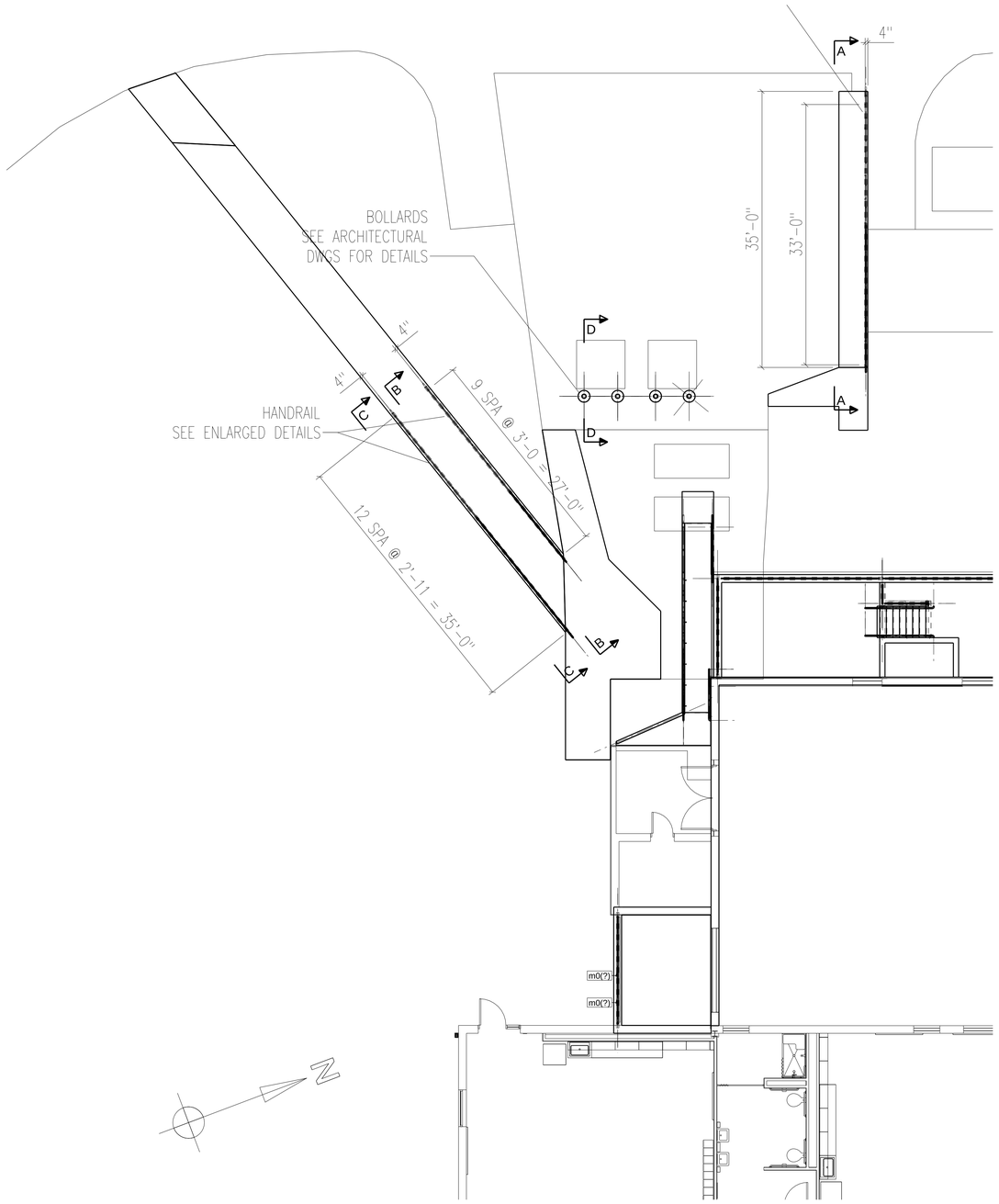

RAMP RAIL - OUTDOOR SEATING AREA WEST
1:96

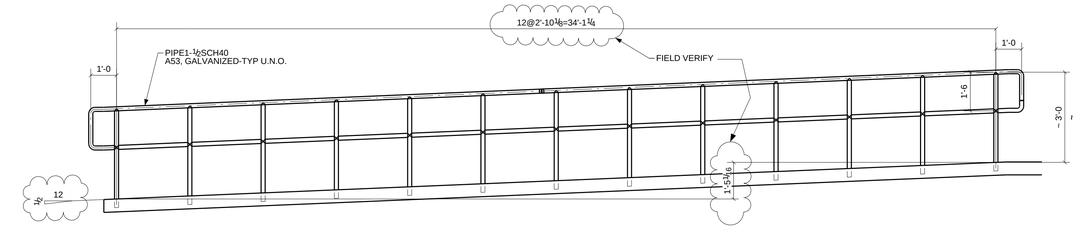

SECTION ~ A - A
1:32

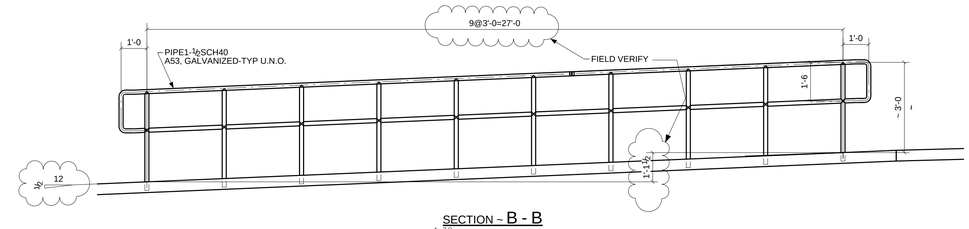

SECTION ~ B - B
1:32

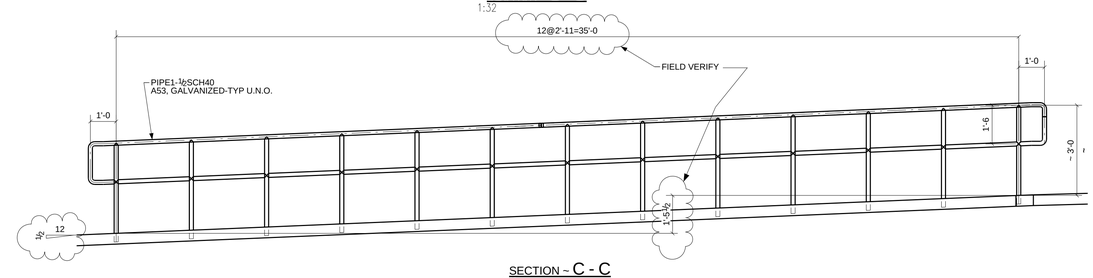

SECTION ~ C - C
1:32

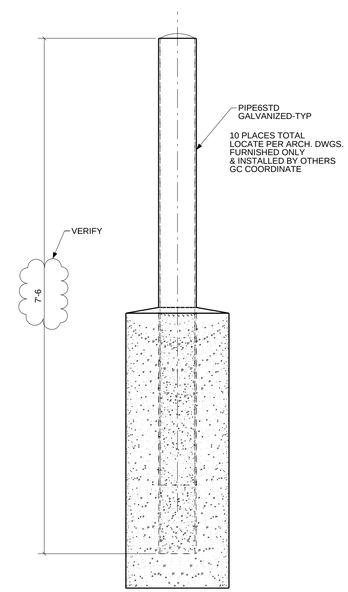

SECTION ~ D - D
1:12

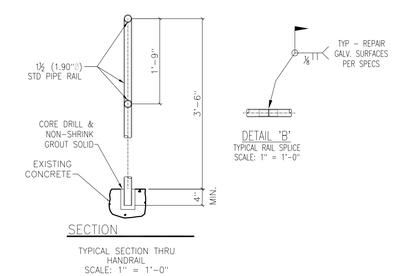

DRAWINGS PREPARED BY DETAILER FROM INFORMATION CONTAINED IN THE PROJECT DOCUMENTS WITH INSTRUCTIONS FROM THE FABRICATOR. DETAILER IS NOT RESPONSIBLE FOR ANY DESIGN, ENGINEERING OR CODE ISSUES WHICH MAY ARISE FROM THE USE OF THESE DRAWINGS. APPROVALS SHOULD BE OBTAINED FROM THE OWNER, ARCHITECT, ENGINEER, CONTRACTOR, WHICH EVER IS APPLICABLE. THE FABRICATOR SHOULD CHECK THE DETAIL DOCUMENTS FOR CORRECTNESS BEFORE RELEASING FOR FABRICATION. THE USE OF THE DETAILED DRAWINGS FOR FABRICATION CONSTITUTES ACCEPTANCE AND APPROVAL OF THE DRAWINGS, MATERIAL LIST OR CUT LIST, WHICH EVER APPLIES.

REV.	DESCRIPTION	DATE	DWN	CHK
A	For Approval & Field Survey	10/4/10	TMc	TAN

GENERAL NOTES

MATERIAL: A992 / A36 U/N
ELECTRODES: E70XX LH
REF. DRG.
HOLES: 13/16 DIA. U/N
CONN'S: -
SURFACE PREP.
AND PAINT:
SSPC-SP-2
GREY PRIMER DEVOE NA-195 (U.N,)

JOB USE
SHOP
APPROVAL

DESCRIPTION: RAILS @ EXISTING CONCRETE RAMPS

PROJ. NAME Hamilton High School Phase III
LOCATION Hamilton City School District - Hamilton, OH

DRAWN BY TMc
DATE 10/01/2010
CHKD. BY TAN
DATE
JOB No. 10-16
DRG. No. E100
REV. A

CONTRACTOR GC Contracting
ARCH./ENG. SHP

Avenue Fabricating Inc.
1281 Clough Pike
Batavia, OH 45103
(513) 752-1911

This project shall be erected in accordance with Section 7 of the AISC Code of Standard Practice, which includes 7.14 Correction of Errors, that states the following:

The corrections of minor misfits by moderate reaming, grinding, welding or cutting, and the drawing of elements into line with drift pins, shall be considered to be normal erection operations. Errors that cannot be corrected using the foregoing means, or that require major changes in member or connection configuration, shall be promptly reported to the responsible entity for approval of the required remedial work. Upon notice by the erector, to enable the responsible entity to either correct the error or approve the most efficient and economical method of correction to be used by others.

All field welds to be made with E70xx low hydrogen electrodes

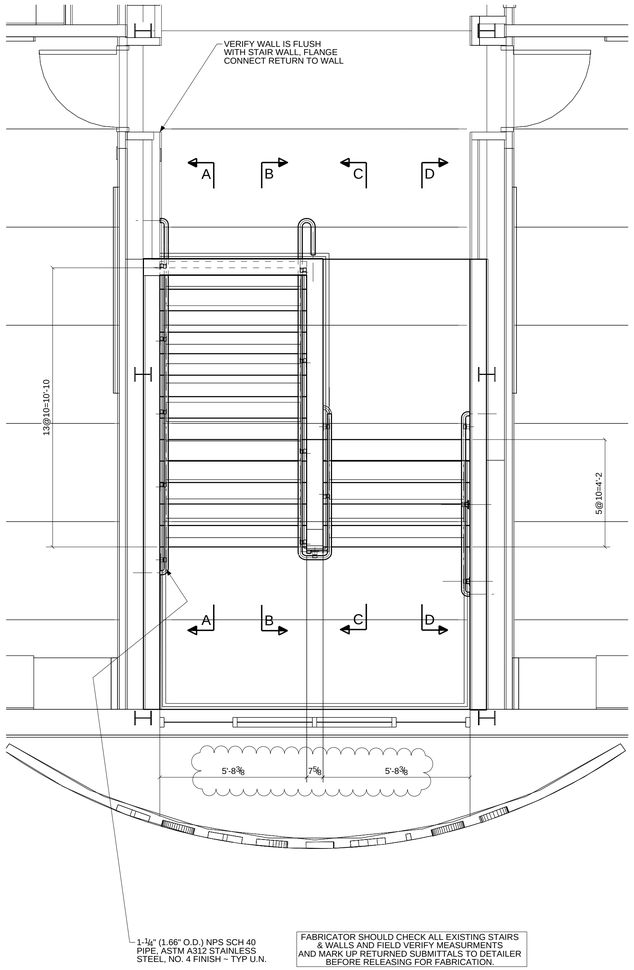

FABRICATOR SHOULD CHECK ALL EXISTING STAIRS & WALLS AND FIELD VERIFY MEASURMENTS AND MARK UP RETURNED SUBMITTALS TO DETAILER BEFORE RELEASING FOR FABRICATION.

STAIR S1 - CLASSROOMS EAST WING

1:32

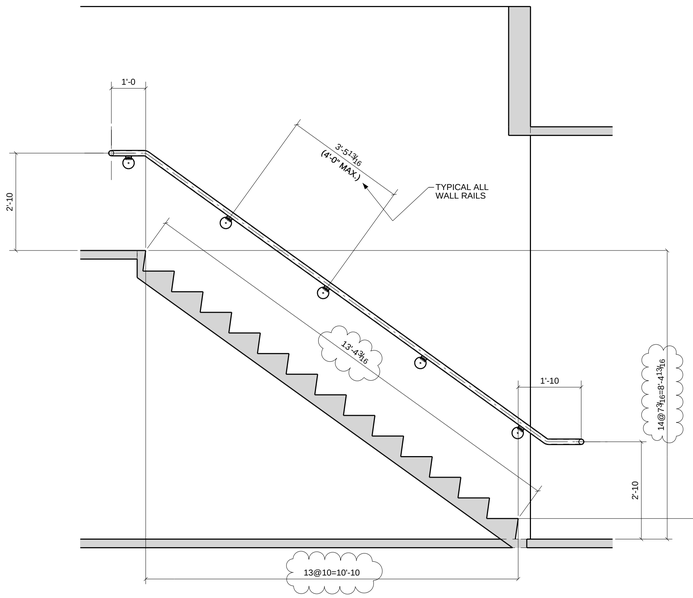

SECTION ~ A - A

1:24

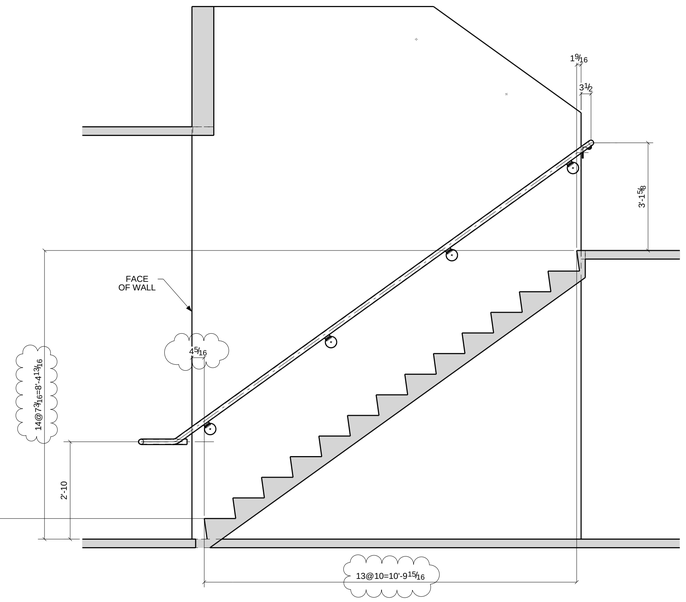

SECTION ~ B - B

1:24

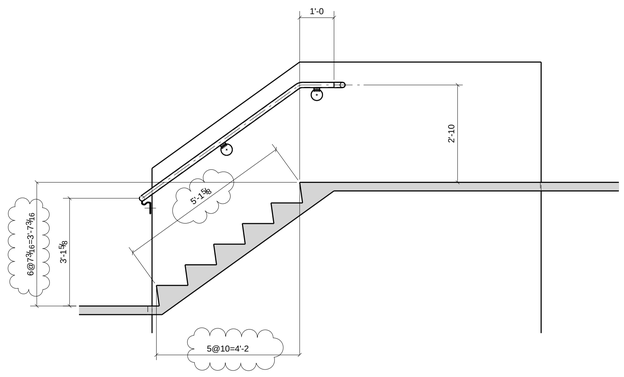

SECTION ~ C - C

1:24

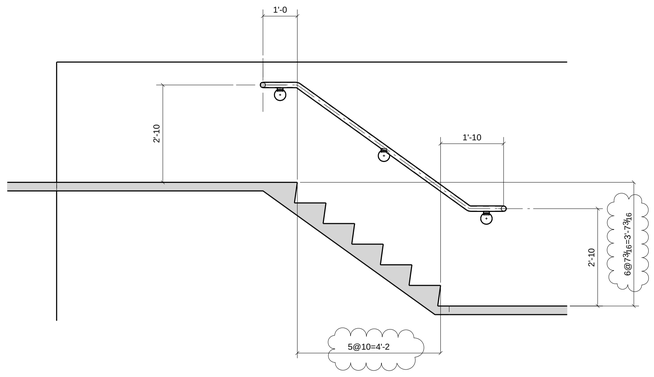

SECTION ~ D - D

1:24

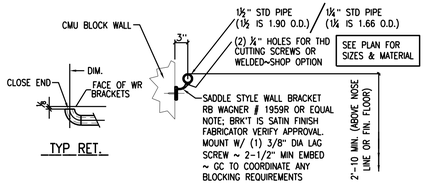

TYP RET.

TYPICAL WALL RAIL DETAILS

SCALE 1" = 1'-0

DRAWINGS PREPARED BY DETAILER FROM INFORMATION CONTAINED IN THE PROJECT DOCUMENTS WITH INSTRUCTIONS FROM THE FABRICATOR. DETAILER IS NOT RESPONSIBLE FOR ANY DESIGN, ENGINEERING OR CODE ISSUES WHICH MAY ARISE FROM THE USE OF THESE DRAWINGS. APPROVALS SHOULD BE OBTAINED FROM THE OWNER, ARCHITECT, ENGINEER, CONTRACTOR, WHICH EVER IS APPLICABLE. THE FABRICATOR SHOULD CHECK THE DETAIL DOCUMENTS FOR CORRECTNESS BEFORE RELEASING FOR FABRICATION. THE USE OF THE DETAILED DRAWINGS FOR FABRICATION CONSTITUTES ACCEPTANCE AND APPROVAL OF THE DRAWINGS, MATERIAL LIST OR CUT LIST, WHICH EVER APPLIES.

This project shall be erected in accordance with Section 7 of the AISC Code of Standard Practice, which includes 7.14 Correction of Errors, that states the following:

The corrections of minor misfits by moderate reaming, grinding, welding or cutting, and the use of erection bolts in holes shall be a normal part of connection work in the erection operations. Errors that cannot be corrected using the foregoing means, or that require major changes in member or connection configuration, shall be promptly reported to the owner's representatives for design and construction, and the fabricator by the erector, to enable the responsible entity to either correct the error or approve the most efficient and economical method of correction to be used by others.

All field welds to be made with E70xx low hydrogen electrodes.

REV.	DESCRIPTION	DATE	DWN	CHK
A	For Approval & Field Survey	10/4/10	TMc	TAN

GENERAL NOTES

MATERIAL: A992 / A36 U/N | ELECTRODES: E70XX LH | REF. DRG.

HOLES: 13/16 DIA. U/N | CONN'S: -

SURFACE PREP.
AND PAINT:
SSPC-SP-2
GREY PRIMER DEVOE NA-195 (U.N.)

JOB USE | SHOP | APPROVAL

DESCRIPTION: RAILS @ EXISTING STAIR S1

PROJ. NAME: Hamilton High School Phase III

LOCATION: Hamilton City School District - Hamilton, OH

CONTRACTOR: GC Contracting ARCH./ENG.: SHP

DRAWN BY: TMc
DATE: 10/03/2010
CHKD. BY: TAN
DATE
JOB No.: 10-16
DRG. No.: E101
REV.: A

Avenue Fabricating Inc.
1281 Clough Pike
Batavia, OH 45103
(513) 752-1911

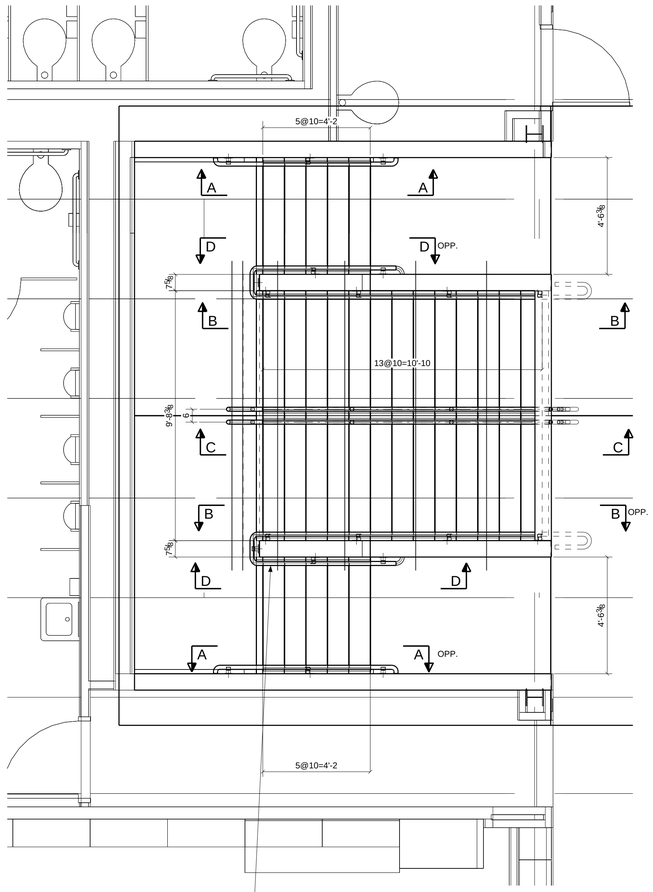

FABRICATOR SHOULD CHECK ALL EXISTING STAIRS & WALLS AND FIELD VERIFY MEASURMENTS AND MARK UP RETURNED SUBMITTALS TO DETAILER BEFORE RELEASING FOR FABRICATION.

STAIR S2 - CLASSROOMS EAST WING

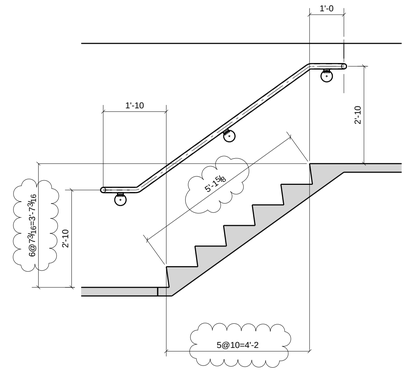

SECTION ~ A - A
1:24

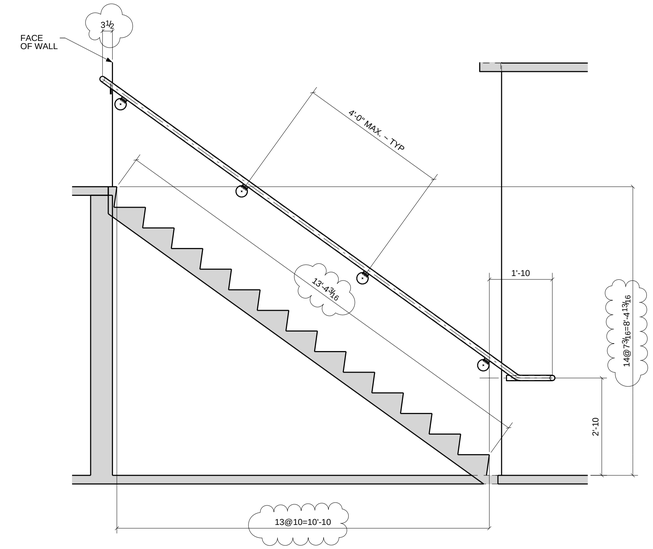

SECTION ~ B - B
1:24

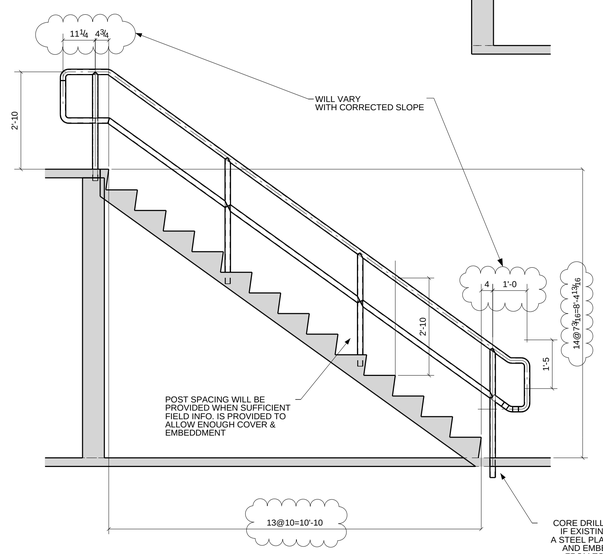

C - C

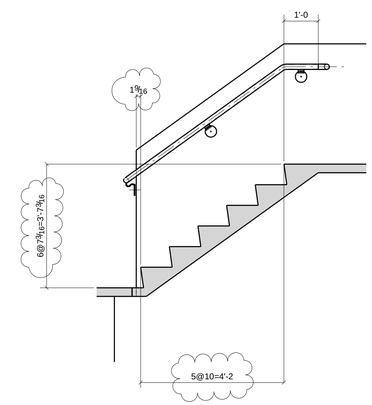

D - D

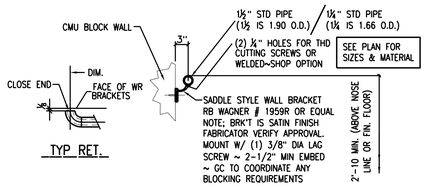

TYP RET.

TYPICAL WALL RAIL DETAILS

SCALE 1" = 1'-0

DRAWINGS PREPARED BY DETAILER FROM INFORMATION CONTAINED IN THE PROJECT DOCUMENTS WITH INSTRUCTIONS FROM THE FABRICATOR. DETAILER IS NOT RESPONSIBLE FOR ANY DESIGN, ENGINEERING OR CODE ISSUES WHICH MAY ARISE FROM THE USE OF THESE DRAWINGS. APPROVALS SHOULD BE OBTAINED FROM THE OWNER, ARCHITECT, ENGINEER, CONTRACTOR, WHICH EVER IS APPLICABLE. THE FABRICATOR SHOULD CHECK THE DETAIL DOCUMENTS FOR CORRECTNESS BEFORE RELEASING FOR FABRICATION. THE USE OF THE DETAILED DRAWINGS FOR FABRICATION CONSTITUTES ACCEPTANCE AND APPROVAL OF THE DRAWINGS, MATERIAL LIST OR CUT LIST, WHICH EVER APPLIES.

This project shall be erected in accordance with Section 7 of the AISC Code of Standard Practice, which includes 7.14 Correction of Errors, that states the following:

The corrections of minor misfits by moderate reaming, grinding, welding or cutting, and the drawing of elements into line with drift pins, shall be considered to be normal erection operations. Errors that cannot be corrected using the foregoing means, or that require major changes in member or connection configuration, shall be promptly reported to the owner's representatives for design and construction, and the fabricator by the erector, to enable the responsible entity to either correct the error or approve the most efficient and economical method of correction to be used by others.

All field welds to be made with E70xx low hydrogen electrodes

REV.	DESCRIPTION	DATE	DWN	CHK
A	For Approval & Field Survey	10/4/10	TMc	TAN

GENERAL NOTES

MATERIAL: A992 / A36 U/N | ELECTRODES: E70XX LH | REF. DRG.

HOLES: 13/16 DIA. U/N | CONN'S: -

SURFACE PREP. AND PAINT:
SSPC-SP-2
GREY PRIMER DEVOE NA-195 (U.N.)

JOB USE | SHOP | APPROVAL

DESCRIPTION: RAILS @ EXISTING STAIR S2

PROJ. NAME: Hamilton High School Phase III
LOCATION: Hamilton City School District - Hamilton, OH
CONTRACTOR: GC Contracting ARCH./ENG.: SHP

DRAWN BY: TMc
DATE: 10/04/2010
CHKD. BY: TAN
DATE
JOB No.: 10-16
DRG. No.: E102 REV.: A

Avenue Fabricating Inc.
1281 Clough Pike
Batavia, OH 45103
(513) 752-1911

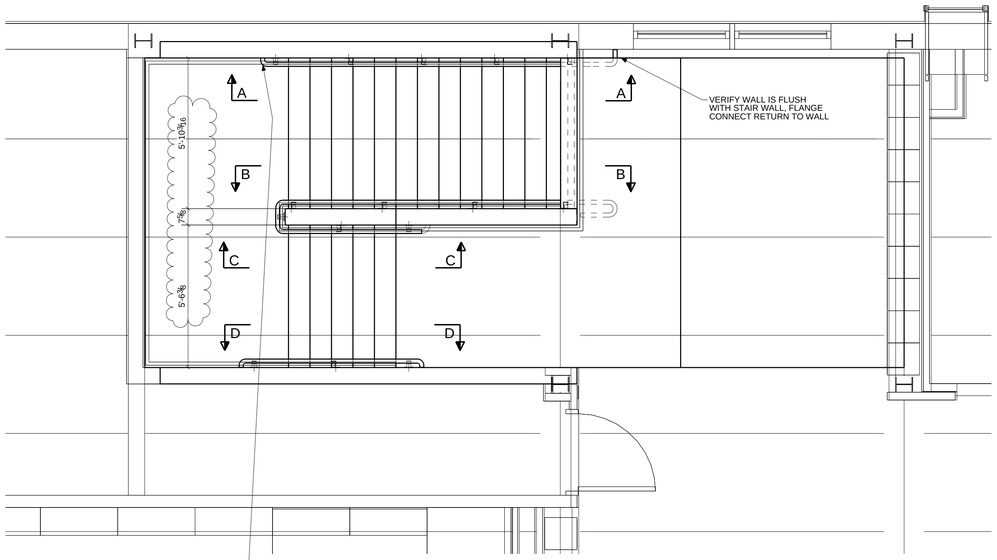

1-¼" (1.66" O.D.) NPS SCH 40
PIPE. ASTM A312 STAINLESS
STEEL, NO. 4 FINISH ~ TYP U.N.

FABRICATOR SHOULD CHECK ALL EXISTING STAIRS
& WALLS AND FIELD VERIFY MEASURMENTS
AND MARK UP RETURNED SUBMITTALS TO DETAILER
BEFORE RELEASING FOR FABRICATION.

STAIR S3 - CLASSROOMS EAST WING

1:32

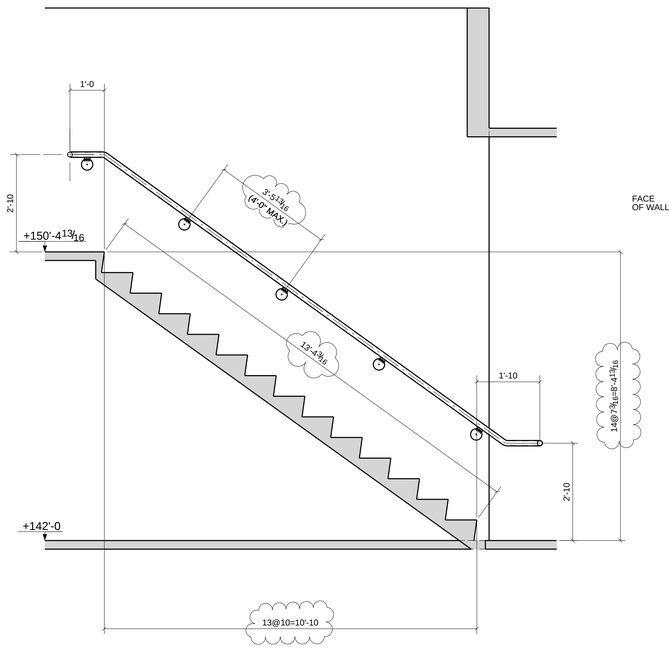

SECTION ~ A - A

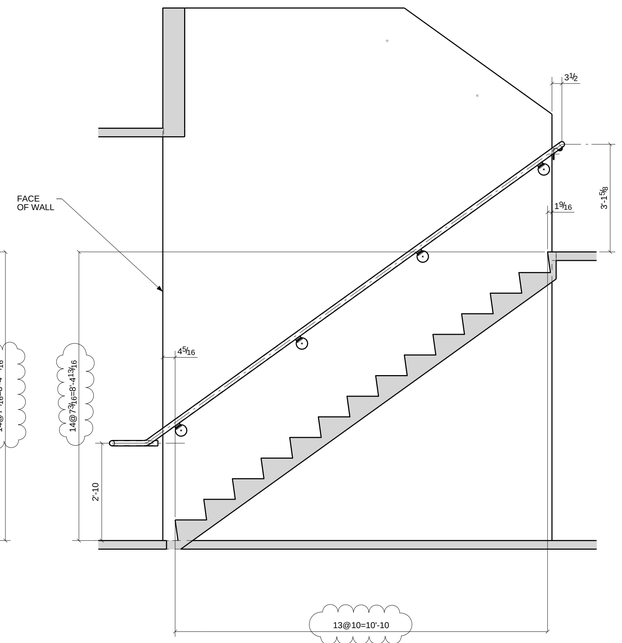

SECTION ~ B - B

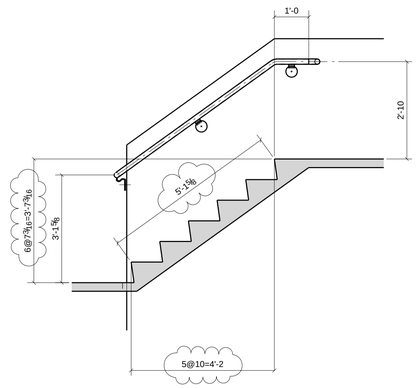

SECTION ~ C - C

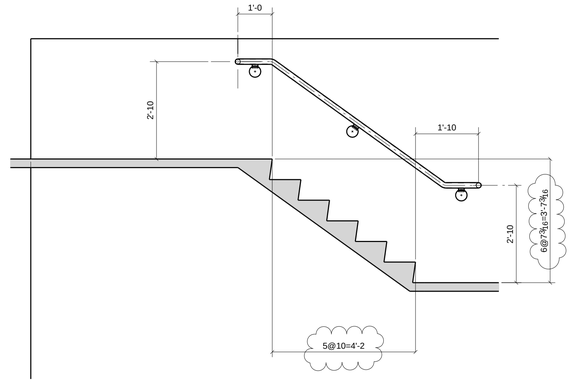

SECTION ~ D - D

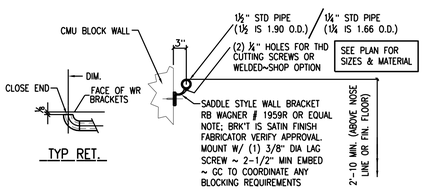

TYPICAL WALL RAIL DETAILS

SCALE 1" = 1'-0

DRAWINGS PREPARED BY DETAILER FROM INFORMATION CONTAINED IN THE PROJECT DOCUMENTS WITH INSTRUCTIONS FROM THE FABRICATOR. DETAILER IS NOT RESPONSIBLE FOR ANY DESIGN, ENGINEERING OR CODE ISSUES WHICH MAY ARISE FROM THE USE OF THESE DRAWINGS. APPROVALS SHOULD BE OBTAINED FROM THE OWNER, ARCHITECT, ENGINEER, CONTRACTOR, WHICH EVER IS APPLICABLE. THE FABRICATOR SHOULD CHECK THE DETAIL DOCUMENTS FOR CORRECTNESS BEFORE RELEASING FOR FABRICATION. THE USE OF THE DETAILED DRAWINGS FOR FABRICATION CONSTITUTES ACCEPTANCE AND APPROVAL OF THE DRAWINGS, MATERIAL LIST OR CUT LIST, WHICH EVER APPLIES.

This project shall be erected in accordance with Section 7 of the AISC Code of Standard Practice, which includes 7.14 Correction of Errors, that states the following:

The corrections of minor misfits by moderate reaming, grinding, welding or cutting, and the drawing of elements into line with drift pins, shall be considered to be normal erection operations. Errors that cannot be corrected using the foregoing means, or that affect the strength or serviceability of the structure, shall be promptly, fully and reported to the owner's representatives for design and construction, and the fabricator by the erector, to enable the responsible entity to either correct the error or approve the most efficient and economical method of correction to be used by others.

All field welds to be made with E70xx low hydrogen electrodes

REV.	DESCRIPTION	DATE	DWN	CHK
A	For Approval & Field Survey	10/4/10	TMc	TAN

GENERAL NOTES

MATERIAL: A992 / A36 U/N | ELECTRODES: E70XX LH | REF. DRG.

HOLES: 13/16 DIA. U/N | CONN'S: -

SURFACE PREP.
AND PAINT:
SSPC-SP-2
GREY PRIMER DEVOE NA-195 (U.N.)

JOB USE | SHOP | APPROVAL

DESCRIPTION: RAILS @ EXISTING STAIR S3

PROJ. NAME Hamilton High School Phase III
LOCATION Hamilton City School District - Hamilton, OH

CONTRACTOR GC Contracting ARCH./ENG. SHP

DRAWN BY TMc
DATE 10/04/2010
CHKD. BY TAN
DATE
JOB No. 10-16
DRG. No. E103
REV. A

Avenue Fabricating Inc.
1281 Clough Pike
Batavia, OH 45103
(513) 752-1911

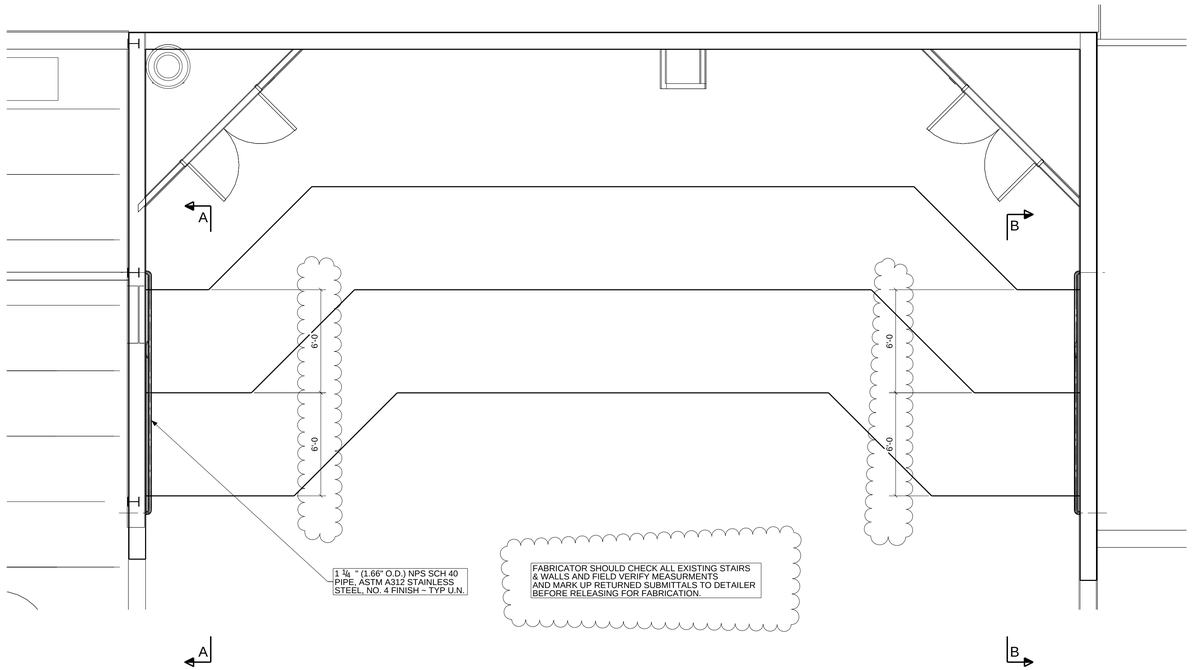

PLAN ~ MULTI-PURPOSE ROOM 2136 ~ WALL RAIL

1:48

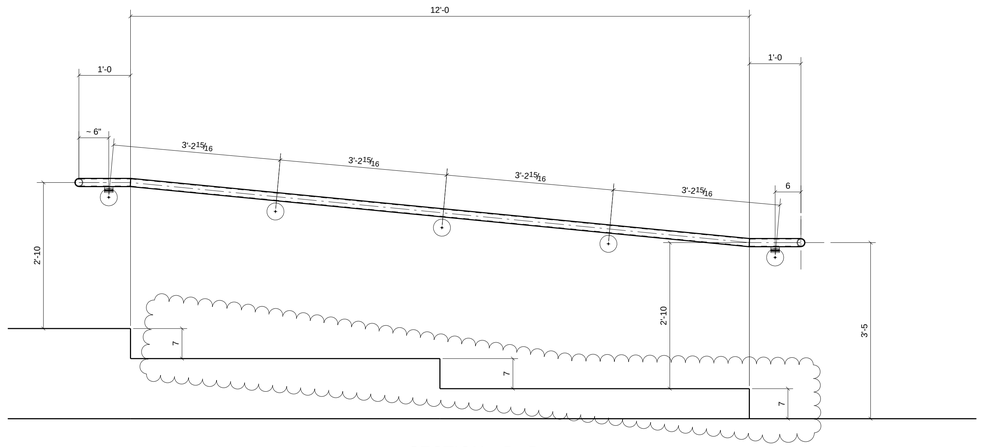

SECTION ~ B - B

1:16

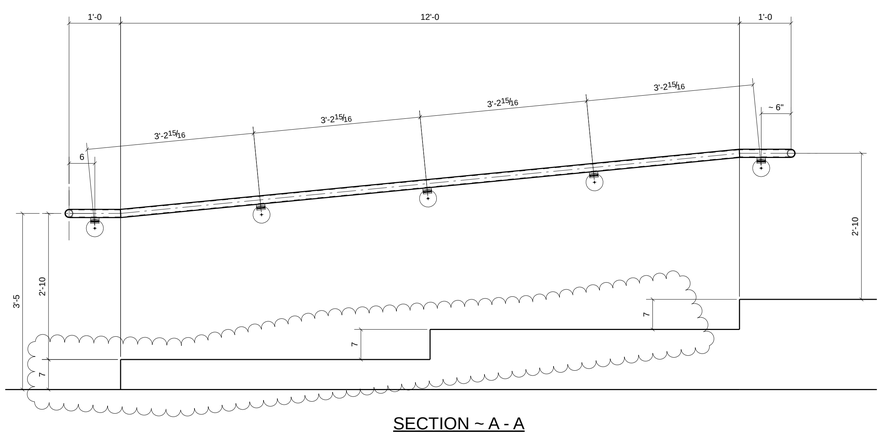

SECTION ~ A - A

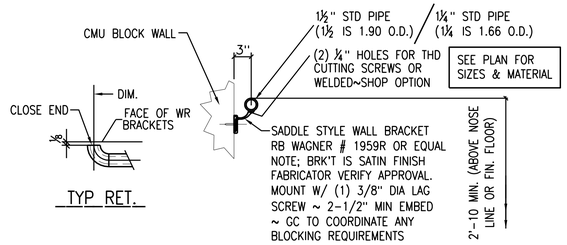

TYP RET.

TYPICAL WALL RAIL DETAILS

SCALE 1" = 1'-0

DRAWINGS PREPARED BY DETAILER FROM INFORMATION CONTAINED IN THE PROJECT DOCUMENTS WITH INSTRUCTIONS FROM THE FABRICATOR. DETAILER IS NOT RESPONSIBLE FOR ANY DESIGN, ENGINEERING OR CODE ISSUES WHICH MAY ARISE FROM THE USE OF THESE DRAWINGS. APPROVALS SHOULD BE OBTAINED FROM THE OWNER, ARCHITECT, ENGINEER, CONTRACTOR, WHICH EVER IS APPLICABLE. THE FABRICATOR SHOULD CHECK THE DETAIL DOCUMENTS FOR CORRECTNESS BEFORE RELEASING FOR FABRICATION. THE USE OF THE DETAILED DRAWINGS FOR FABRICATION CONSTITUTES ACCEPTANCE AND APPROVAL OF THE DRAWINGS, MATERIAL LIST OR CUT LIST, WHICH EVER APPLIES.

This project shall be erected in accordance with Section 7 of the AISC Code of Standard Practice, which includes 7.14 Correction of Errors, that states the following:

The corrections of minor misfits by moderate reaming, grinding, welding or cutting, and the drawing of elements into line with drift pins, shall be considered to be normal erection operations. Misfits which can not be corrected using the foregoing means or that require major changes in member or connection configuration, shall be promptly reported to the owner's representatives for design and construction, and the fabricator or the erector, to enable the responsible entity to either correct the error or approve the most efficient and economical method of correction to be used by others.

All field welds to be made with E70xx low hydrogen electrodes

REV.	DESCRIPTION	DATE	DWN	CHK
A	For Approval & Field Survey	10/12/10	TMc	TAN

GENERAL NOTES

MATERIAL: A992 / A36 U/N | ELECTRODES: E70XX LH | REF. DRG.

HOLES: 13/16 DIA. U/N | CONN'S: -

SURFACE PREP. AND PAINT:

SSPC-SP-2

GREY PRIMER DEVOE NA-195 (U.N,)

JOB USE | SHOP | APPROVAL

DESCRIPTION: MULTI-PURPOSE RAILS @ 2136

PROJ. NAME: Hamilton High School Phase III

LOCATION: Hamilton City School District - Hamilton, OH

CONTRACTOR: GC Contracting | ARCH./ENG.: SHP

DRAWN BY: TMc

DATE: 10/11/2010

CHKD. BY: TAN

DATE

JOB No.: 10-16

DRG. No.: E104 | REV.: A

Avenue Fabricating Inc.
1281 Clough Pike
Batavia, OH 45103
(513) 752-1911

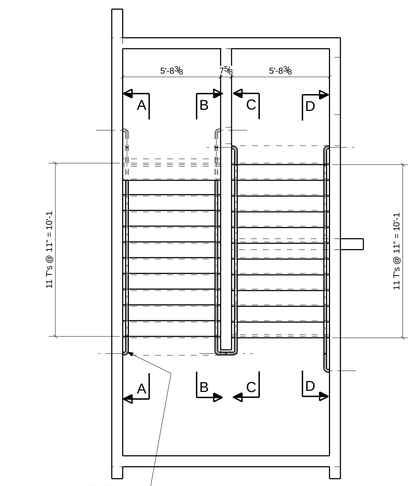

FABRICATOR SHOULD CHECK ALL EXISTING STAIRS & WALLS AND FIELD VERIFY MEASURMENTS AND MARK UP RETURNED SUBMITTALS TO DETAILER BEFORE RELEASING FOR FABRICATION.

PLAN ~ STAIR S-10 ~ WALL RAIL

1:48

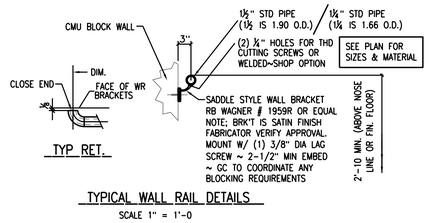

TYP RET.

TYPICAL WALL RAIL DETAILS

SCALE 1" = 1'-0

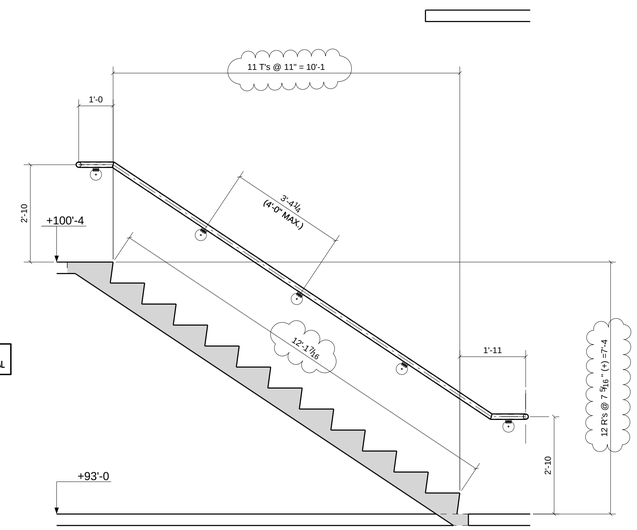

A - A

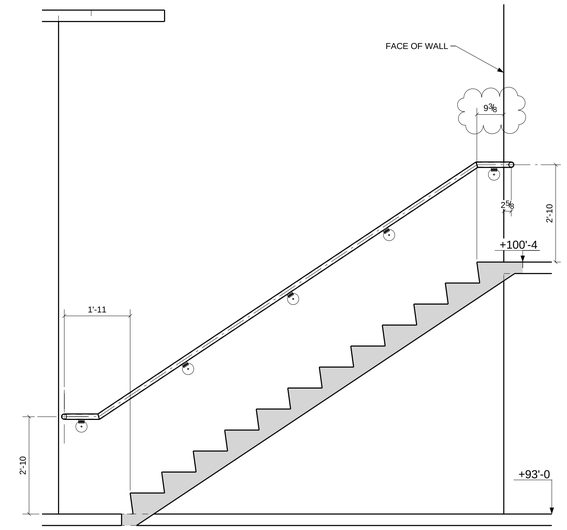

B - B

VERIFY ~ EXIST. SLAB DWGS SCALE 28'

PLAN ~ RAMP 1018 ~ WALL RAIL

1:48

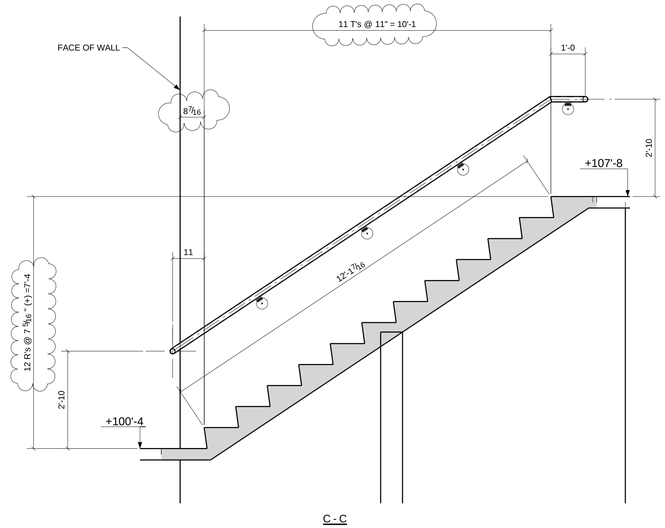

C - C

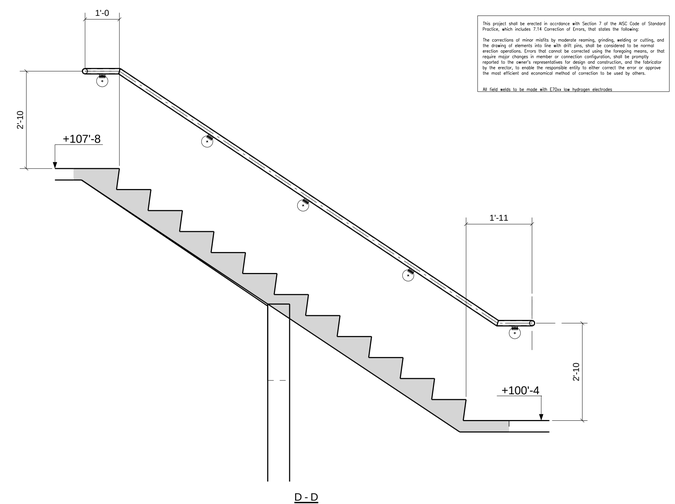

D - D

This project shall be erected in accordance with Section 7 of the AISC Code of Standard Practice, which includes 7.14 Correction of Errors, that states the following:

The corrections of minor misfits by moderate reaming, grinding, welding or cutting, and the drawing of elements into line with drift pins, shall be considered to be normal erection operations. Errors that cannot be corrected using the foregoing means, or that require major changes in member or connection configuration, shall be promptly reported to the owner's representatives for design and construction, and the fabricator by the erector, to enable the responsible entity to either correct the error or approve the most efficient and economical method of correction to be used by others.

All field welds to be made with E70xx low hydrogen electrodes

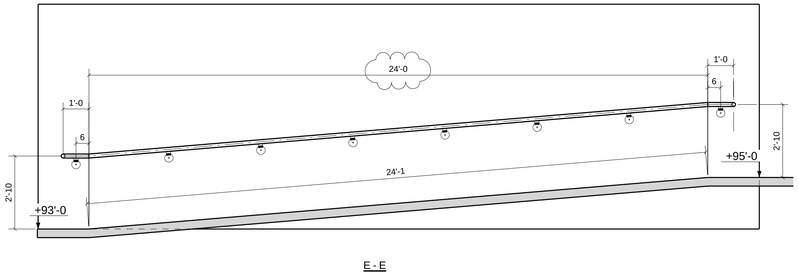

E - E

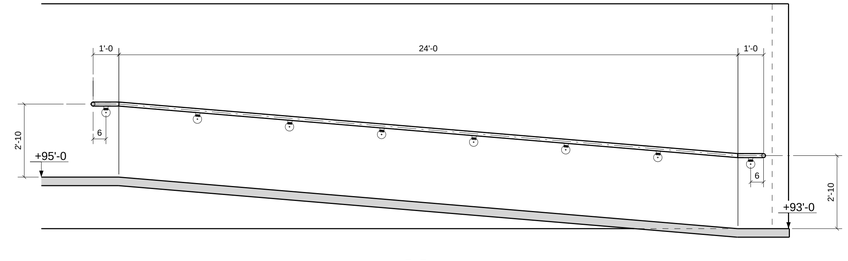

F - F

REV.	DESCRIPTION	DATE	DWN	CHK
A	For Approval & Field Survey	10/12/10	TMc	TAN

GENERAL NOTES

MATERIAL: A992 / A36 U/N | ELECTRODES: E70XX LH | REF. DRG.

HOLES: 13/16 DIA. U/N | CONN'S: -

SURFACE PREP. AND PAINT:

SSPC-SP-2

GREY PRIMER DEVOE NA-195 (U.N.)

JOB USE | SHOP | APPROVAL

DESCRIPTION: RAILS @ EXISTING STAIR S-9 & RAMP 1019

PROJ. NAME: Hamilton High School Phase III

LOCATION: Hamilton City School District - Hamilton, OH

CONTRACTOR: GC Contracting ARCH./ENG.: SHP

DRAWN BY: TMc

DATE: 10/12/2010

CHKD. BY: TAN

DATE

JOB No.: 10-16

DRG. No.: E105 REV.: A

Avenue Fabricating Inc.
1281 Clough Pike
Batavia, OH 45103
(513) 752-1911

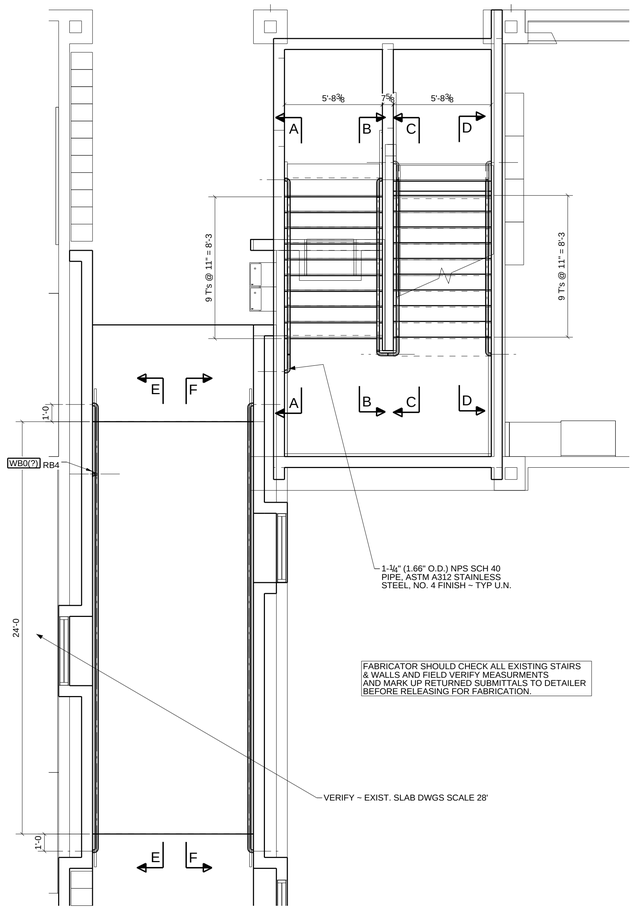

FABRICATOR SHOULD CHECK ALL EXISTING STAIRS & WALLS AND FIELD VERIFY MEASURMENTS AND MARK UP RETURNED SUBMITTALS TO DETAILER BEFORE RELEASING FOR FABRICATION.

PLAN ~ STAIR S-9 ~ WALL RAIL
1:48

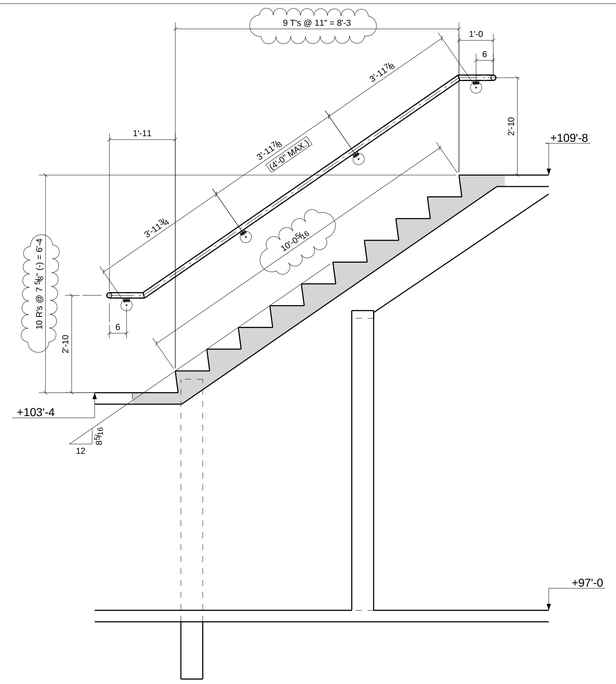

SECTION A - A
1:24

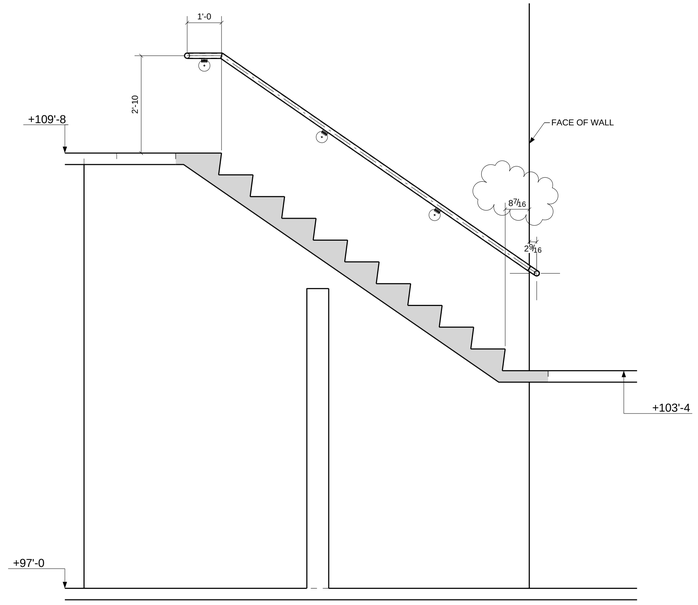

SECTION B - B
1:24

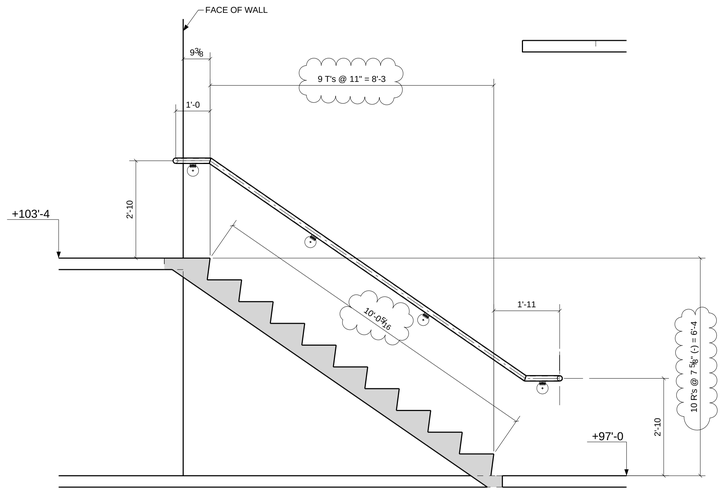

SECTION C - C
1:24

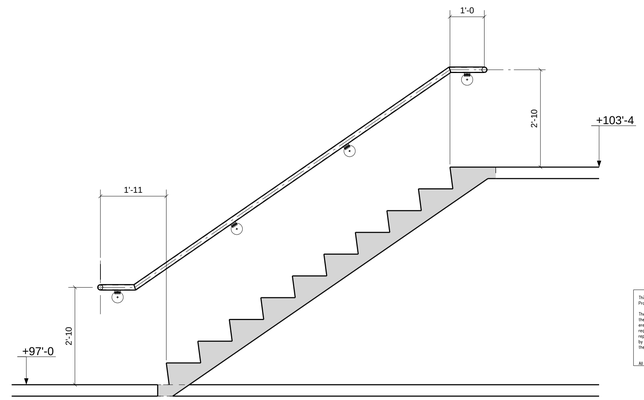

SECTION D - D
1:24

This project shall be erected in accordance with Section 7 of the AISC Code of Standard Practice, which includes 7.14 Correction of Errors, that states the following:

The corrections of minor misfits by moderate reaming, grinding, welding or cutting, and the use of drift pins and minor adjustments of the erection equipment are a normal part of erection operations. Errors that cannot be corrected using the foregoing means, or that require major changes in member or connection configuration, shall be promptly reported to the owner's representatives for design and construction, and the fabricator by the erector, to enable the responsible entity to either correct the error or approve the most efficient and economical method of correction to be used by others.

All field welds to be made with E70xx low hydrogen electrodes

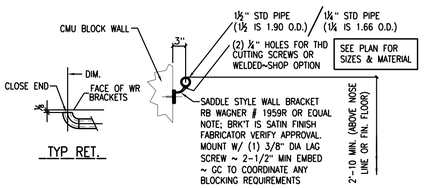

TYP RET.

TYPICAL WALL RAIL DETAILS
SCALE 1" = 1'-0

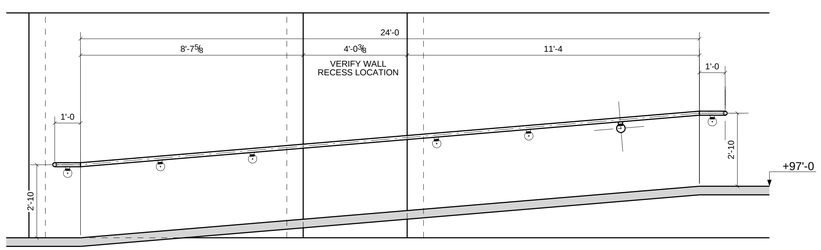

SECTION E - E
1:32

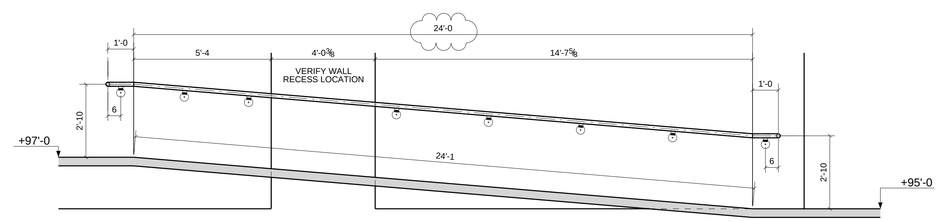

SECTION F - F
1:32

REV.	DESCRIPTION	DATE	DWN	CHK
A	For Approval & Field Survey	10/12/10	TMc	TAN

GENERAL NOTES

MATERIAL: A992 / A36 U/N
ELECTRODES: E70XX LH
REF. DRG.
HOLES: 13/16 DIA. U/N
CONN'S: -

SURFACE PREP. AND PAINT:
SSPC-SP-2
GREY PRIMER DEVOE NA-195 (U.N.)

JOB USE
SHOP
APPROVAL

DESCRIPTION: RAILS @ EXISTING STAIR S-10 & RAMP 1018

PROJ. NAME: Hamilton High School Phase III
LOCATION: Hamilton City School District - Hamilton, OH
CONTRACTOR: GC Contracting
ARCH./ENG.: SHP

DRAWN BY: TMc
DATE: 10/11/2010
CHKD. BY: TAN
DATE:
JOB No.: 10-16
DRG. No.: E106
REV.: A

Avenue Fabricating Inc.
1281 Clough Pike
Batavia, OH 45103
(513) 752-1911

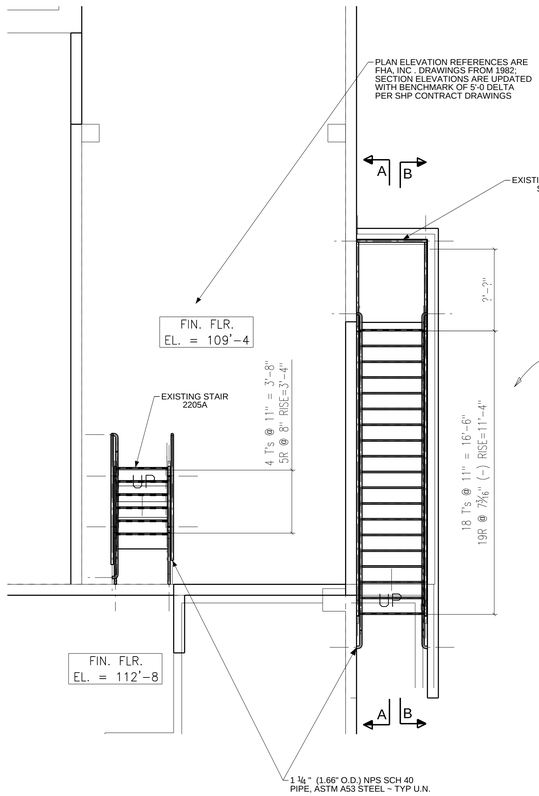

STAIR RAIL S-12 & 2205A
1:48

FABRICATOR SHOULD CHECK ALL EXISTING STAIRS & WALLS AND FIELD VERIFY MEASURMENTS AND MARK UP RETURNED SUBMITTALS TO DETAILER BEFORE RELEASING FOR FABRICATION.

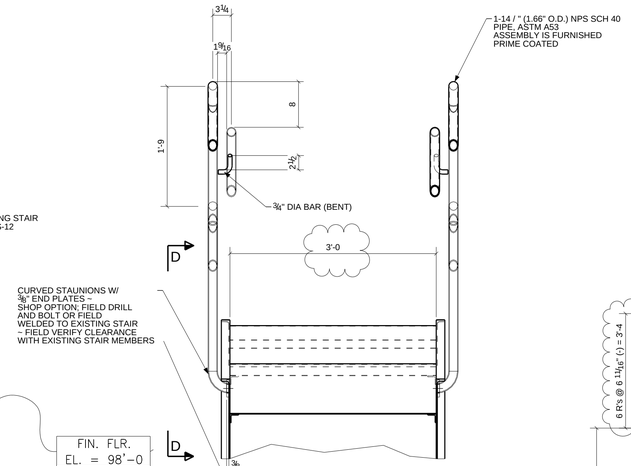

SECTION C - C
1:12

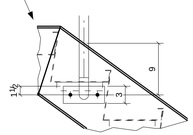

SECTION D - D
1:12

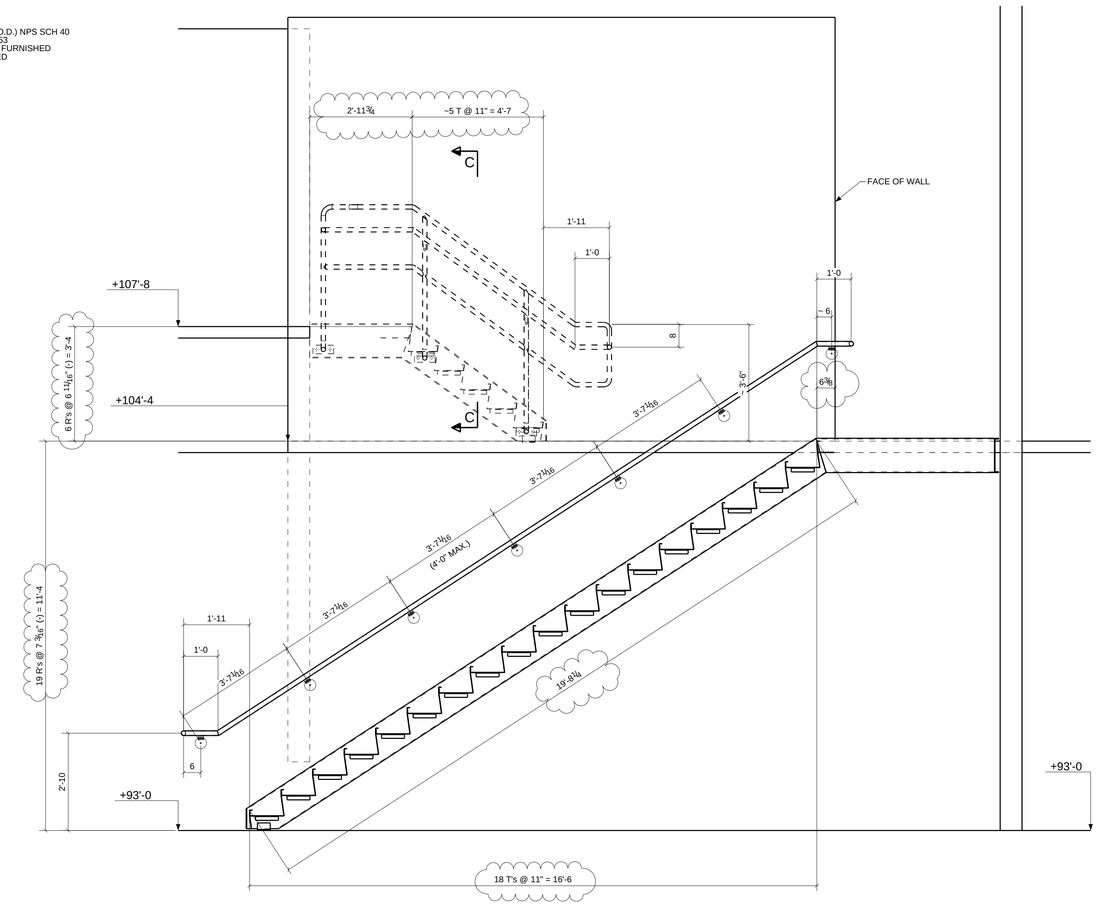

SECTION A - A
1:24

DRAWINGS PREPARED BY DETAILER FROM INFORMATION CONTAINED IN THE PROJECT DOCUMENTS WITH INSTRUCTIONS FROM THE FABRICATOR. DETAILER IS NOT RESPONSIBLE FOR ANY DESIGN, ENGINEERING OR CODE ISSUES WHICH MAY ARISE FROM THE USE OF THESE DRAWINGS. APPROVALS SHOULD BE OBTAINED FROM THE OWNER, ARCHITECT, ENGINEER, CONTRACTOR, WHICH EVER IS APPLICABLE. THE FABRICATOR SHOULD CHECK THE DETAIL DOCUMENTS FOR CORRECTNESS BEFORE RELEASING FOR FABRICATION. THE USE OF THE DETAILED DRAWINGS FOR FABRICATION CONSTITUTES ACCEPTANCE AND APPROVAL OF THE DRAWINGS, MATERIAL LIST OR CUT LIST, WHICH EVER APPLIES.

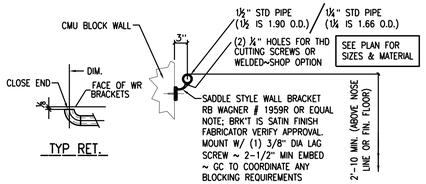

TYPICAL WALL RAIL DETAILS
SCALE 1" = 1'-0

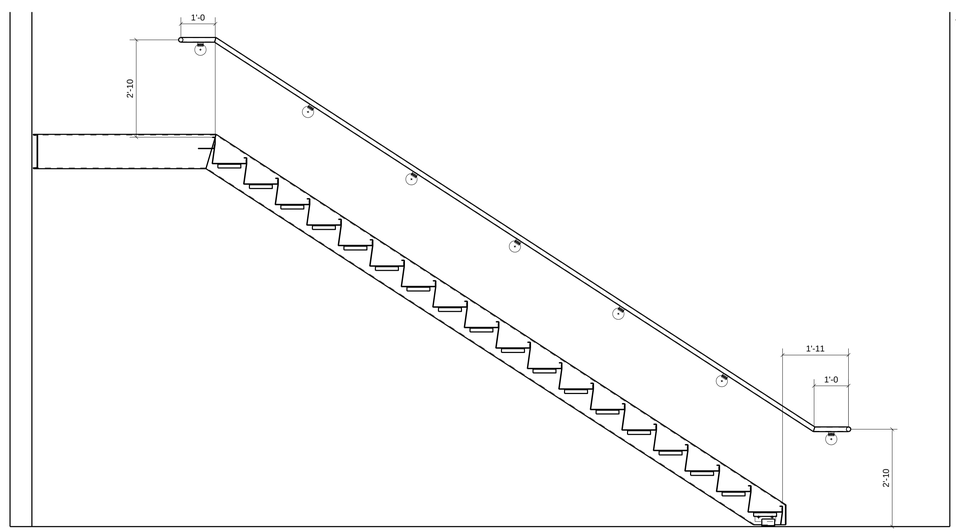

SECTION B - B

This project shall be erected in accordance with Section 7 of the AISC Code of Standard Practice, which includes 7.14 Correction of Errors, that states the following:

The corrections of minor misfits by moderate reaming, grinding, welding or cutting, and the removal and replacement of a few rivets or bolts, are considered a part of the erection operations. Errors that cannot be corrected using the foregoing means, or that require major changes in member or connection configuration, shall be promptly reported to the owner's representatives for design and construction, and the fabricator by the erector, to enable the responsible entity to either correct the error or approve the most efficient and economical method of correction to be used by others.

All field welds to be made with E70xx low hydrogen electrodes

REV.	DESCRIPTION	DATE	DWN	CHK
A	For Approval & Field Survey	10/12/10	TMc	TAN

GENERAL NOTES

MATERIAL: A992 / A36 U/N
ELECTRODES: E70XX LH
REF. DRG.
HOLES: 13/16 DIA. U/N
CONN'S: -

SURFACE PREP. AND PAINT:
SSPC-SP-2
GREY PRIMER DEVOE NA-195 (U.N.)

JOB USE
SHOP
APPROVAL

DESCRIPTION: STAIR RAIL S-12 & 2205A

PROJ. NAME Hamilton High School Phase III
LOCATION Hamilton City School District - Hamilton, OH

DRAWN BY TMc
DATE 10/12/2010
CHKD. BY TAN
DATE

CONTRACTOR GC Contracting
ARCH./ENG. SHP

Avenue Fabricating Inc.
1281 Clough Pike
Batavia, OH 45103
(513) 752-1911

JOB No. 10-16
DRG. No. E107
REV. A

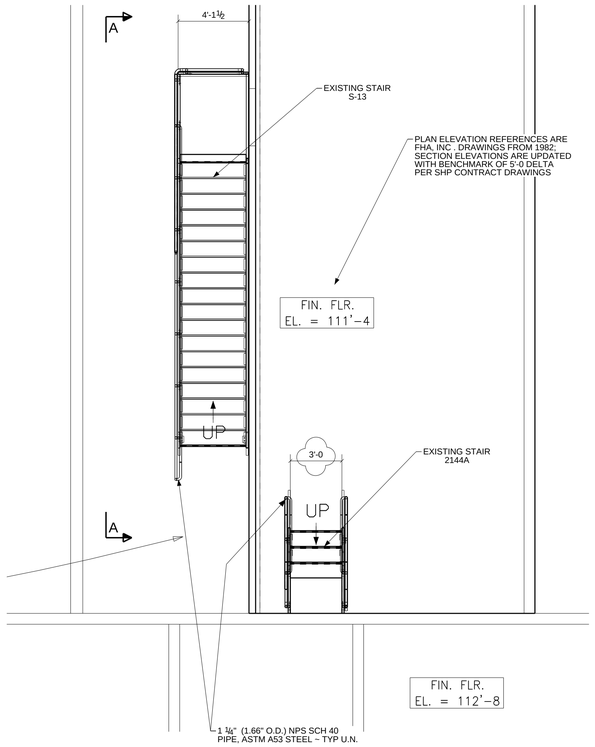

FABRICATOR SHOULD CHECK ALL EXISTING STAIRS
& WALLS AND FIELD VERIFY MEASURMENTS
AND MARK UP RETURNED SUBMITTALS TO DETAILER
BEFORE RELEASING FOR FABRICATION.

PLAN ~ STAIR S-13 & 2244A RAIL

1:48

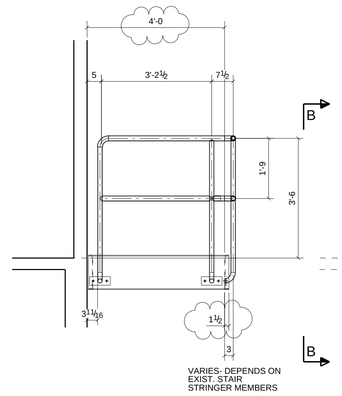

SECTION B - B

1:24

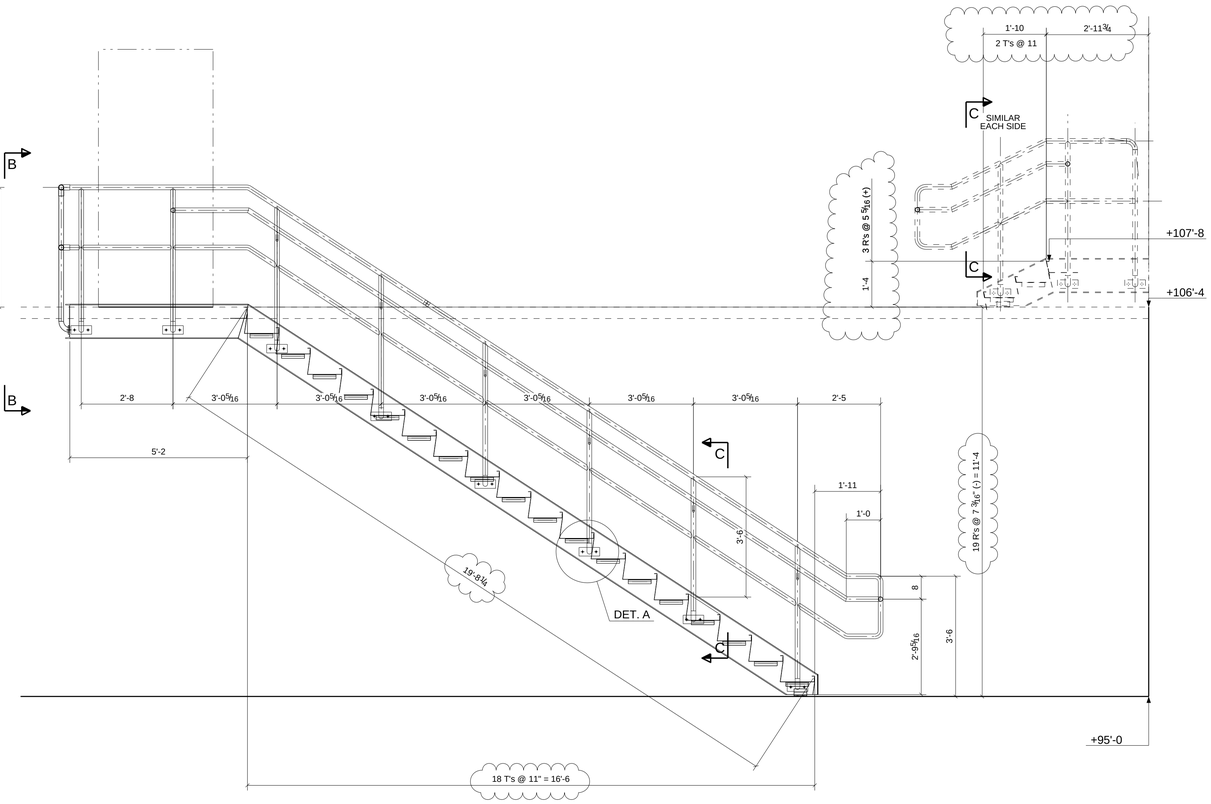

SECTION A - A

1:24

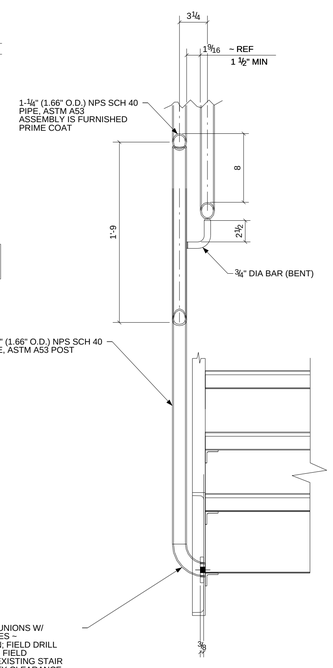

SECTION C - C

1:8

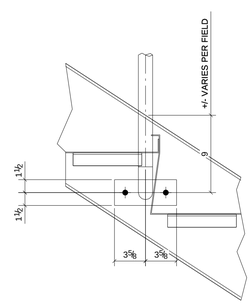

DETAIL A

1:8

DRAWINGS PREPARED BY DETAILER FROM INFORMATION CONTAINED IN THE PROJECT DOCUMENTS WITH INSTRUCTIONS FROM THE FABRICATOR. DETAILER IS NOT RESPONSIBLE FOR ANY DESIGN, ENGINEERING OR CODE ISSUES WHICH MAY ARISE FROM THE USE OF THESE DRAWINGS. APPROVALS SHOULD BE OBTAINED FROM THE OWNER, ARCHITECT, ENGINEER, CONTRACTOR, WHICH EVER IS APPLICABLE. THE FABRICATOR SHOULD CHECK THE DETAIL DOCUMENTS FOR CORRECTNESS BEFORE RELEASING FOR FABRICATION. THE USE OF THE DETAILED DRAWINGS FOR FABRICATION CONSTITUTES ACCEPTANCE AND APPROVAL OF THE DRAWINGS, MATERIAL LIST OR CUT LIST, WHICH EVER APPLIES.

This project shall be erected in accordance with Section 7 of the AISC Code of Standard Practice, which includes 7.14 Correction of Errors, that states the following:

The corrections of minor misfits by moderate reaming, grinding, welding or cutting, and the drawing of elements into line with drift pins, shall be considered to be normal erection operations. Errors that cannot be corrected using the foregoing means, or that require major changes in member or connection configuration, shall be promptly reported to the responsible erector and to the owner's representative and fabricator by the erector, to enable the responsible entity to either correct the error or approve the most efficient and economical method of correction to be used by others.

All field welds to be made with E70xx low hydrogen electrodes.

REV.	DESCRIPTION	DATE	DWN	CHK
A	For Approval & Field Survey	10/12/10	TMc	TAN

GENERAL NOTES

MATERIAL: A992 / A36 U.N. | ELECTRODES: E70XX LH | REF. DRG.

HOLES: 13/16 DIA. U/N | CONN'S: -

SURFACE PREP.
AND PAINT:
SSPC-SP-2
GREY PRIMER DEVOE NA-195 (U.N,)

JOB USE | SHOP | APPROVAL

DESCRIPTION: STAIR RAIL S-13 & 2244A

PROJ. NAME Hamilton High School Phase III
LOCATION Hamilton City School District - Hamilton, OH

CONTRACTOR GC Contracting ARCH./ENG. SHP

Avenue Fabricating Inc.
1281 Clough Pike
Batavia, OH 45103
(513) 752-1911

DRAWN BY	TMc
DATE	10/12/2010
CHKD. BY	TAN
DATE	
JOB No.	10-16
DRG. No.	E108
REV.	A

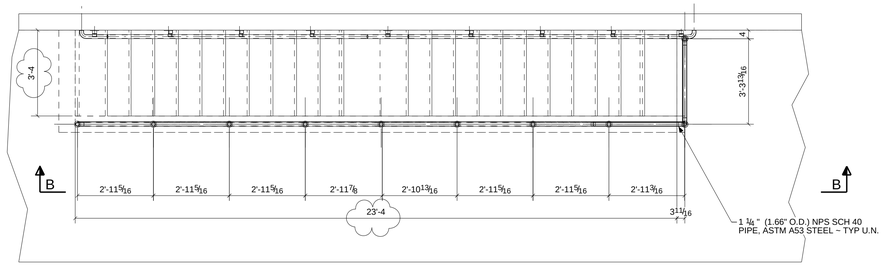

PLAN ~ STAIR S-14 ~ RAILING

FABRICATOR SHOULD CHECK ALL EXISTING STAIRS
& WALLS AND FIELD VERIFY MEASURMENTS
AND MARK UP RETURNED SUBMITTALS TO DETAILER
BEFORE RELEASING FOR FABRICATION.

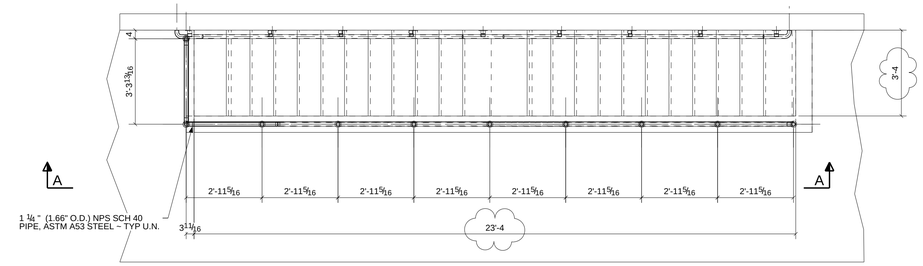

PLAN ~ STAIR S-11 ~ RAILING

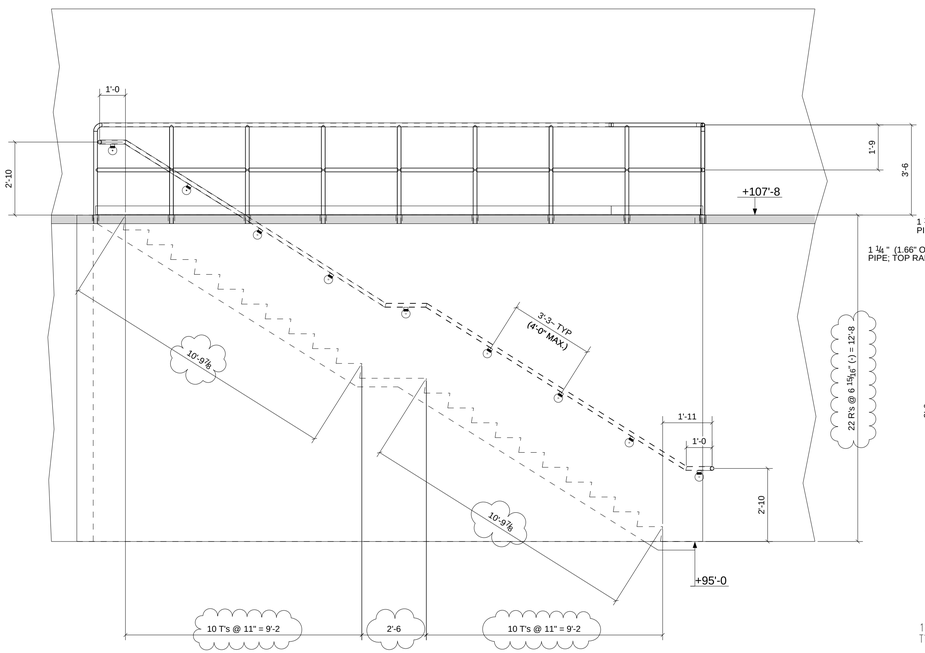

SECTION B - B

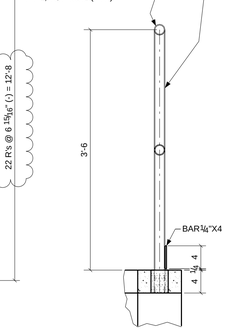

C - C

1:12
TYPICAL SECTION THRU POST

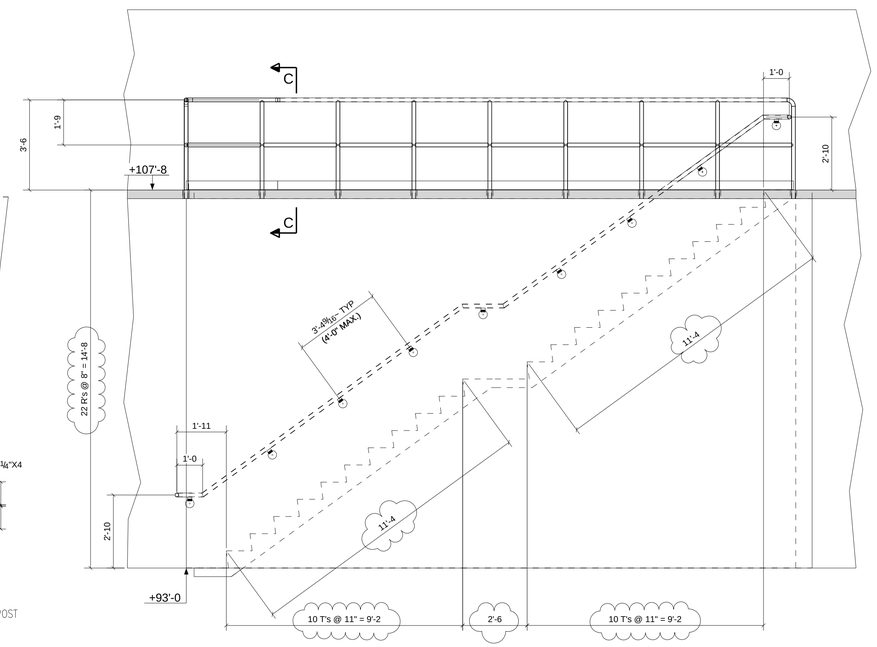

SECTION A - A

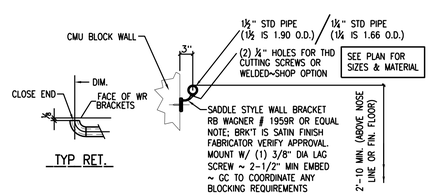

TYP RET.

TYPICAL WALL RAIL DETAILS

SCALE 1" = 1'-0

DRAWINGS PREPARED BY DETAILER FROM INFORMATION CONTAINED IN THE PROJECT DOCUMENTS WITH INSTRUCTIONS FROM THE FABRICATOR. DETAILER IS NOT RESPONSIBLE FOR ANY DESIGN, ENGINEERING OR CODE ISSUES WHICH MAY ARISE FROM THE USE OF THESE DRAWINGS. APPROVALS SHOULD BE OBTAINED FROM THE OWNER, ARCHITECT, ENGINEER, CONTRACTOR, WHICH EVER IS APPLICABLE. THE FABRICATOR SHOULD CHECK THE DETAIL DOCUMENTS FOR CORRECTNESS BEFORE RELEASING FOR FABRICATION. THE USE OF THE DETAILED DRAWINGS FOR FABRICATION CONSTITUTES ACCEPTANCE AND APPROVAL OF THE DRAWINGS, MATERIAL LIST OR CUT LIST, WHICH EVER APPLIES.

This project shall be erected in accordance with Section 7 of the AISC Code of Standard Practice, which includes 7.14 Correction of Errors, that states the following:

The corrections of minor misfits by moderate reaming, grinding, welding or cutting, and the drawing of elements into line with drift pins, shall be considered to be normal erection operations. Errors that cannot be corrected using the foregoing means, or that affect the integrity of the structure, shall be promptly reported to the erector and reported to the owner's representatives for design and construction, and the fabricator by the erector, to enable the responsible entity to either correct the error or approve the most efficient and economical method of correction to be used by others.

All field welds to be made with E70xx low hydrogen electrodes

REV.	DESCRIPTION	DATE	DWN	CHK
A	For Approval & Field Survey	10/12/10	TMc	TAN

GENERAL NOTES

MATERIAL: A992 / A36 U/N | ELECTRODES: E70XX LH | REF. DRG.

HOLES: 13/16 DIA. U/N | CONN'S: -

SURFACE PREP.
AND PAINT:
SSPC-SP-2
GREY PRIMER DEVOE NA-195 (U.N.)

JOB USE | SHOP | APPROVAL

DESCRIPTION: STAIR RAIL S-11 & S-14

PROJ. NAME Hamilton High School Phase III

LOCATION Hamilton City School District - Hamilton, OH

CONTRACTOR GC Contracting ARCH./ENG. SHP

DRAWN BY TMc
DATE 10/12/2010
CHKD. BY TAN
DATE

Avenue Fabricating Inc.
1281 Clough Pike
Batavia, OH 45103
(513) 752-1911

JOB No. 10-16
DRG. No. E109
REV. A

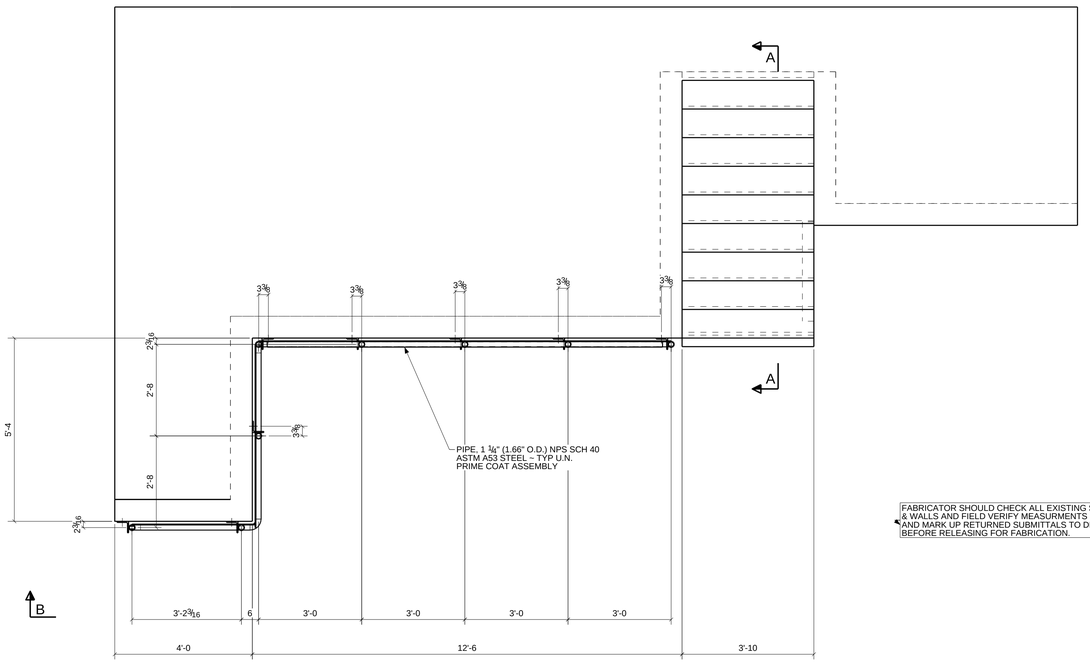

FABRICATOR SHOULD CHECK ALL EXISTING STAIRS & WALLS AND FIELD VERIFY MEASURMENTS AND MARK UP RETURNED SUBMITTALS TO DETAILER BEFORE RELEASING FOR FABRICATION.

PARTIAL PLAN ~ MECHANICAL ROOM 102

1:24

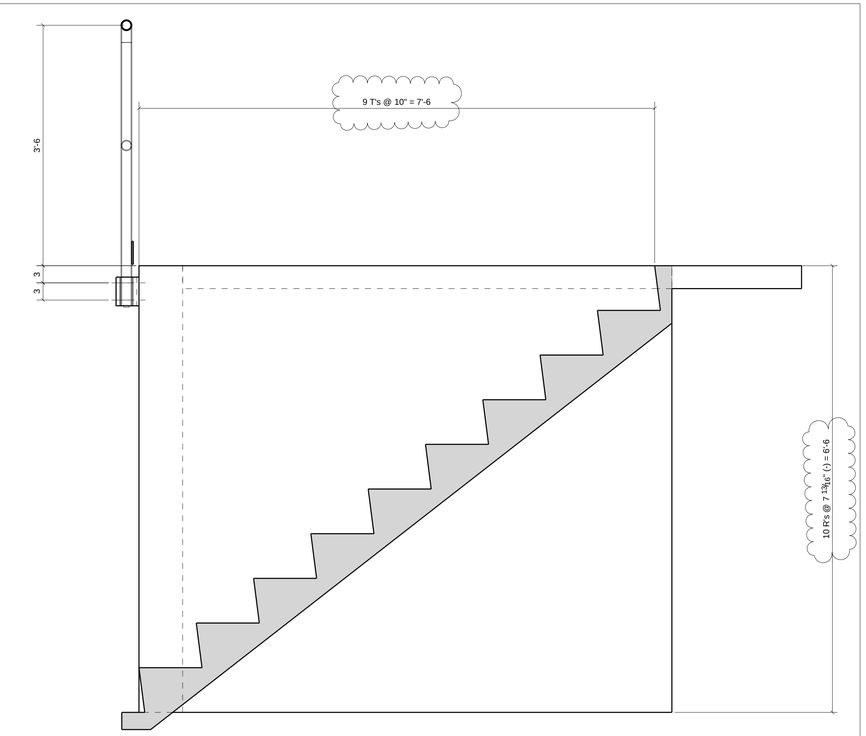

SECTION A - A

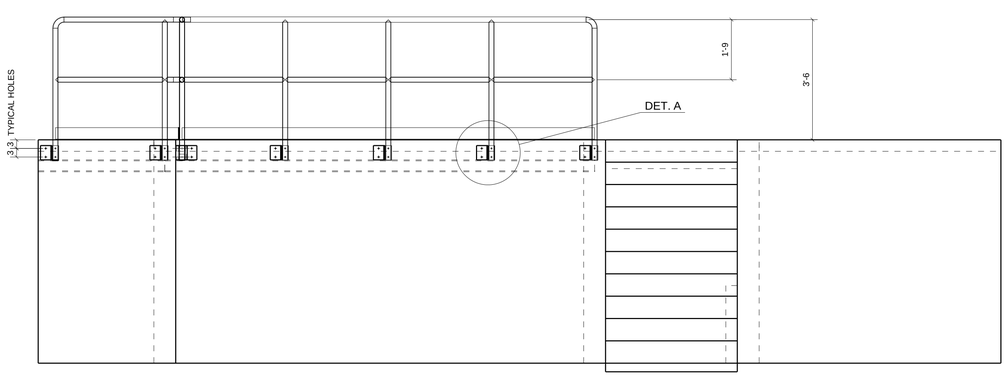

SECTION B - B

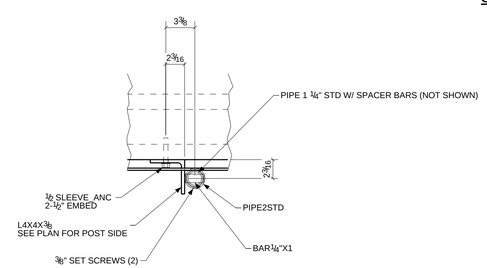

SECTION C - C

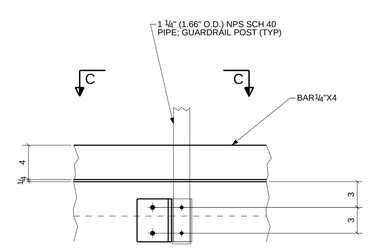

DETAIL A

This project shall be erected in accordance with Section 7 of the AISC Code of Standard Practice, which includes 7.14 Correction of Errors, that states the following:

The corrections of minor misfits by moderate reaming, grinding, welding or cutting, and the drawing of elements into line with drift pins, shall be considered to be normal erection operations. Errors that cannot be corrected using the foregoing means, or that require major changes in member or connection configuration, shall be promptly reported to the owner's representatives for design and construction, and the fabricator and the owner's representatives shall jointly agree on the corrective work to be approved the most efficient and economical method of correction to be used by others.

All field welds to be made with E70xx low hydrogen electrodes.

DRAWINGS PREPARED BY DETAILER FROM INFORMATION CONTAINED IN THE PROJECT DOCUMENTS WITH INSTRUCTIONS FROM THE FABRICATOR. DETAILER IS NOT RESPONSIBLE FOR ANY DESIGN, ENGINEERING OR CODE ISSUES WHICH MAY ARISE FROM THE USE OF THESE DRAWINGS. APPROVALS SHOULD BE OBTAINED FROM THE OWNER, ARCHITECT, ENGINEER, CONTRACTOR, WHICH EVER IS APPLICABLE. THE FABRICATOR SHOULD CHECK THE DETAIL DOCUMENTS FOR CORRECTNESS BEFORE RELEASING FOR FABRICATION. THE USE OF THE DETAILED DRAWINGS FOR FABRICATION CONSTITUTES ACCEPTANCE AND APPROVAL OF THE DRAWINGS, MATERIAL LIST OR CUT LIST, WHICH EVER APPLIES.

REV.	DESCRIPTION	DATE	DWN	CHK
A	For Approval & Field Survey	10/12/10	TMc	TAN

GENERAL NOTES

MATERIAL: A992 / A36 U/N
ELECTRODES: E70XX LH
REF. DRG.
HOLES: 13/16 DIA. U/N
CONN'S: -

SURFACE PREP. AND PAINT:
SSPC-SP-2
GREY PRIMER DEVOE NA-195 (U.N.)

JOB USE
SHOP
APPROVAL

DESCRIPTION: PLAN ~ MECH ROOM 102 ~ REMOVABLE GUARDRAIL

PROJ. NAME Hamilton High School Phase III
LOCATION Hamilton City School District - Hamilton, OH

CONTRACTOR GC Contracting
ARCH./ENG. SHP

DRAWN BY TMc
DATE 10/13/2010
CHKD. BY TAN
DATE
JOB No. 10-16
DRG. No. E110
REV. A

Avenue Fabricating Inc.
1281 Clough Pike
Batavia, OH 45103
(513) 752-1911

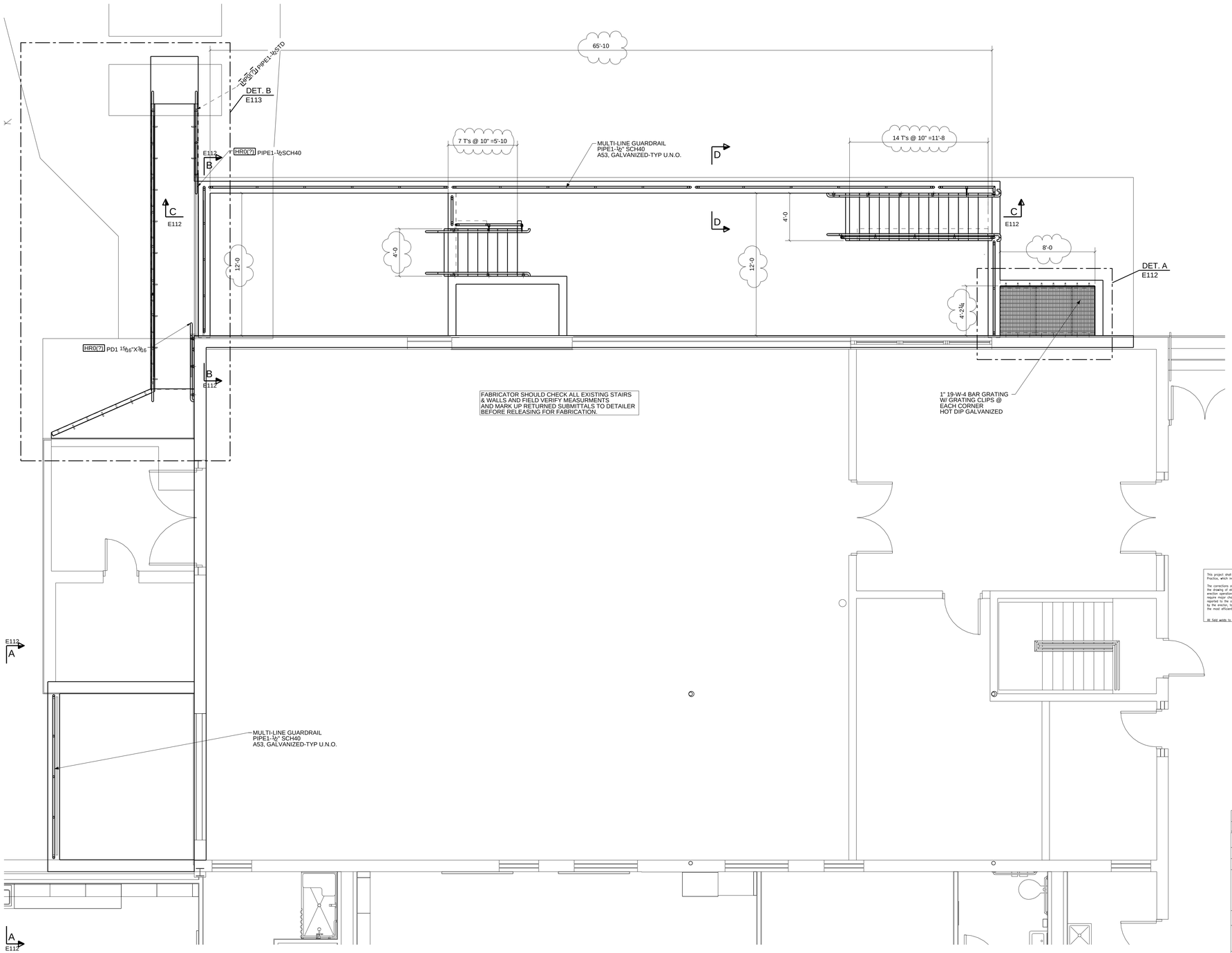

PLAN ~ AREAWAY: MULTILINE RAIL & GRATING ~ A107

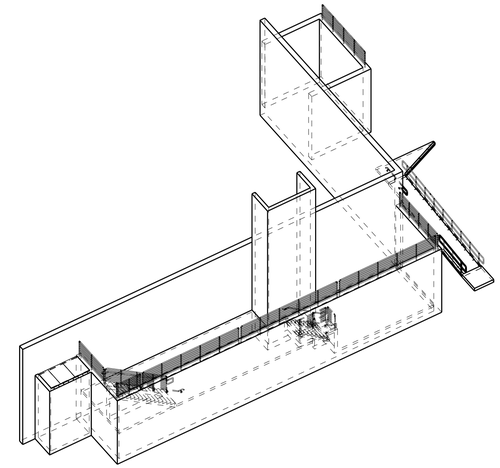

PERSPECTIVE VIEW

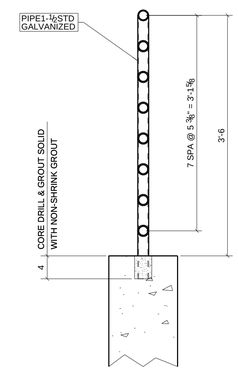

SECTION D - D
TYPICAL SECTION THRU GUARDRAIL
1:12

This project shall be erected in accordance with Section 7 of the AISC Code of Standard Practice, which includes 7.14 Correction of Errors, that states the following:

The corrections of minor misfits by moderate reaming, grinding, welding or cutting, and the drawing of elements into line with drift pins, shall be considered to be normal erection operations. Misfits of a major nature, or misfits of any nature that require major changes in member or connection configuration, shall be promptly reported to the owner's representatives for design and construction, and the fabricator by the erector, to enable the responsible entity to either correct the error or approve the most efficient and economical method of correction to be used by others.

All field welds to be made with E70xx low hydrogen electrodes

DRAWINGS PREPARED BY DETAILER FROM INFORMATION CONTAINED IN THE PROJECT DOCUMENTS WITH INSTRUCTIONS FROM THE FABRICATOR. DETAILER IS NOT RESPONSIBLE FOR ANY DESIGN, ENGINEERING OR CODE ISSUES WHICH MAY ARISE FROM THE USE OF THESE DRAWINGS. APPROVALS SHOULD BE OBTAINED FROM THE OWNER, ARCHITECT, ENGINEER, CONTRACTOR, WHICH EVER IS APPLICABLE. THE FABRICATOR SHOULD CHECK THE DETAIL DOCUMENTS FOR CORRECTNESS BEFORE RELEASING FOR FABRICATION. THE USE OF THE DETAILED DRAWINGS FOR FABRICATION CONSTITUTES ACCEPTANCE AND APPROVAL OF THE DRAWINGS, MATERIAL LIST OR CUT LIST, WHICH EVER APPLIES.

REV.	DESCRIPTION	DATE	DWN	CHK
A	For Approval & Field Survey	10/12/18	TMc	TAN

GENERAL NOTES

MATERIAL: A992 / A36 U/N
ELECTRODES: E70XX LH
REF. DRG.
HOLES: 13/16 DIA. U/N
CONN'S: -

SURFACE PREP.
AND PAINT:
SSPC-SP-2
GREY PRIMER DEVOE NA-195 (U.N.)

JOB USE
SHOP
APPROVAL

DESCRIPTION: PLAN ~ AREAWAY ~ A107 & DOCK RAMP ~ C100 (1 o f 3)

PROJ. NAME Hamilton High School Phase III
LOCATION Hamilton City School District - Hamilton, OH
CONTRACTOR GC Contracting ARCH./ENG. SHP

DRAWN BY TMc
DATE 10/14/2010
CHKD. BY TAN
DATE
JOB No. 10-16
DRG. No. E111
REV. A

Avenue Fabricating Inc.
1281 Clough Pike
Batavia, OH 45103
(513) 752-1911

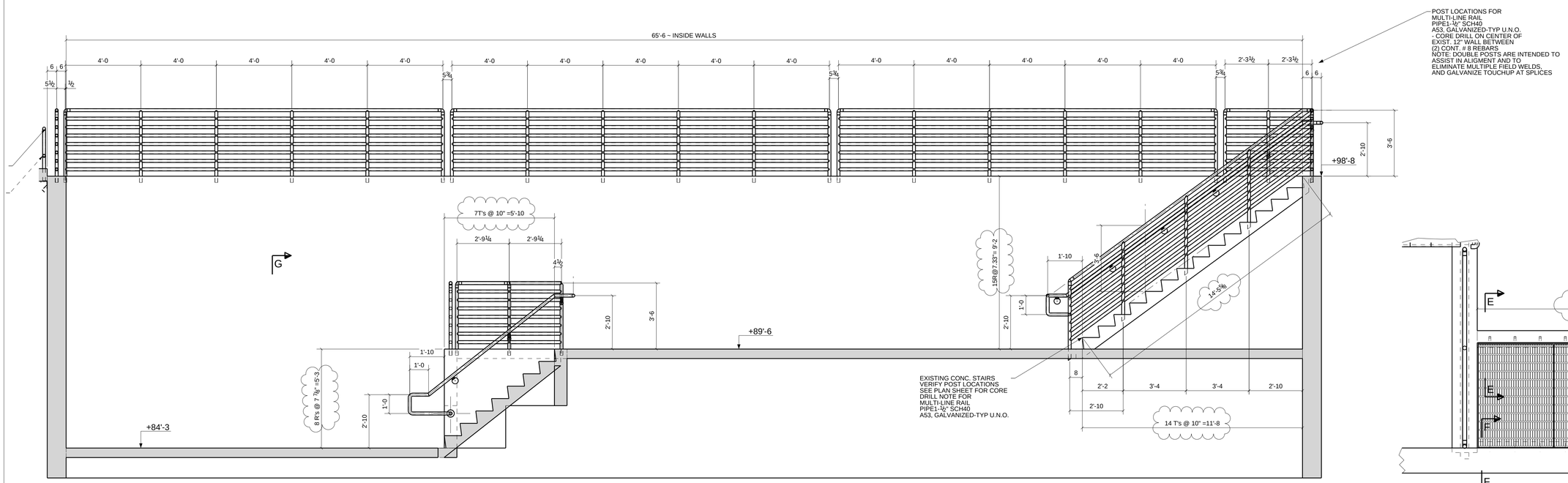

SECTION C - C
E111
1:32

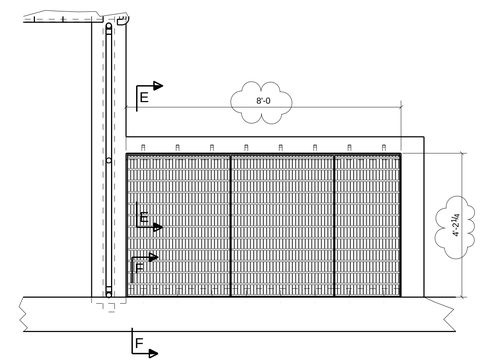

DETAIL A
E111
1:24

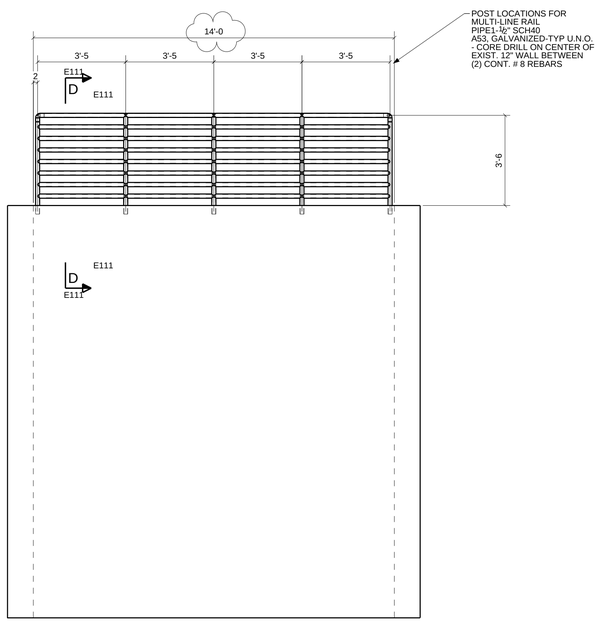

SECTION A - A
E111
1:32

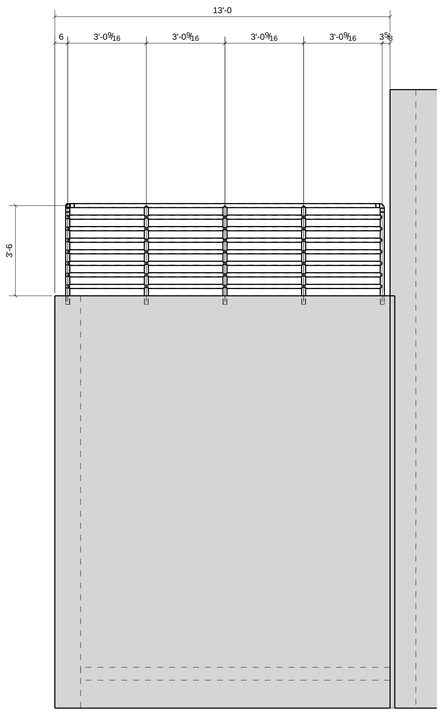

SECTION B - B
E111
1:32

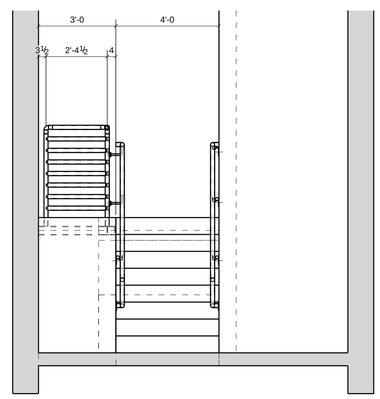

SECTION G - G
1:32

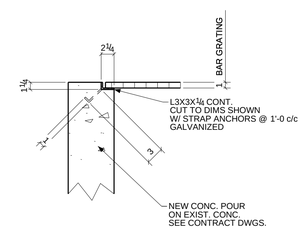

SECTION E - E
E112

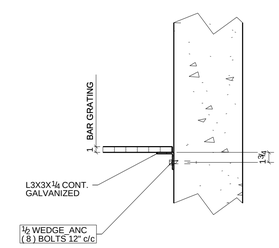

SECTION F - F
1:12

REV.	DESCRIPTION	DATE	DWN	CHK
A	For Approval & Field Survey	10/12/18	TMc	TAN

GENERAL NOTES

MATERIAL: A992 / A36 U/N | ELECTRODES: E70XX LH | REF. DRG.
HOLES: 13/16 DIA. U/N | CONN'S: -

SURFACE PREP.
AND PAINT:
SSPC-SP-2
GREY PRIMER DEVOE NA-195 (U.N,)

JOB USE
SHOP
APPROVAL

DESCRIPTION: PLAN ~ AREAWAY ~ A107 & DOCK RAMP ~ C100 (2 o f 3)

PROJ. NAME Hamilton High School Phase III
LOCATION Hamilton City School District - Hamilton, OH
CONTRACTOR GC Contracting ARCH./ENG. SHP

DRAWN BY TMc
DATE 10/16/2010
CHKD. BY TAN
DATE
JOB No. 10-16
DRG. No. E112 REV. A

Avenue Fabricating Inc.
1281 Clough Pike
Batavia, OH 45103
(513) 752-1911

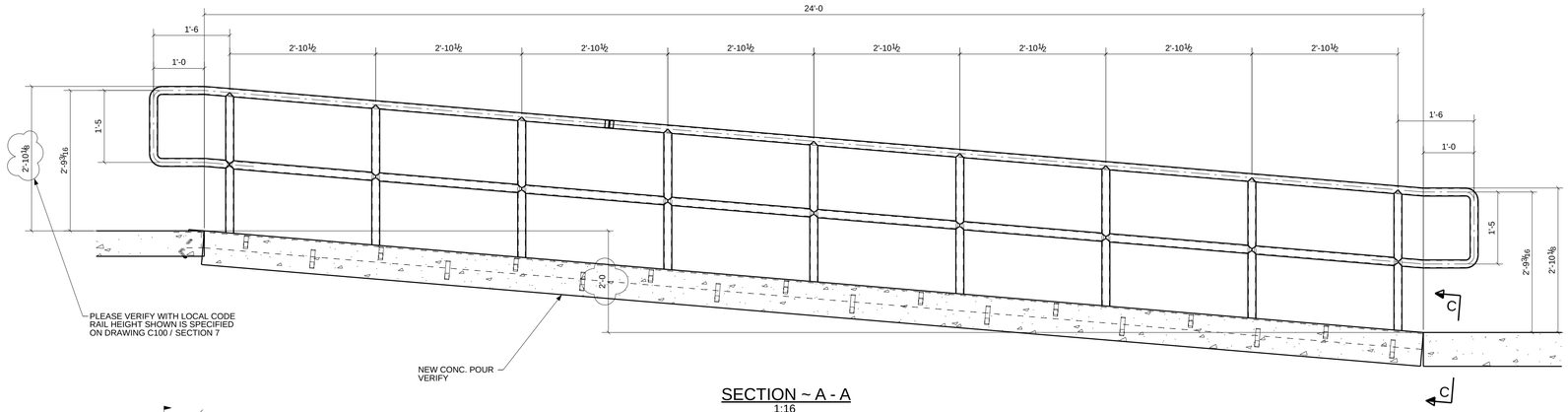

SECTION ~ A - A
1:16

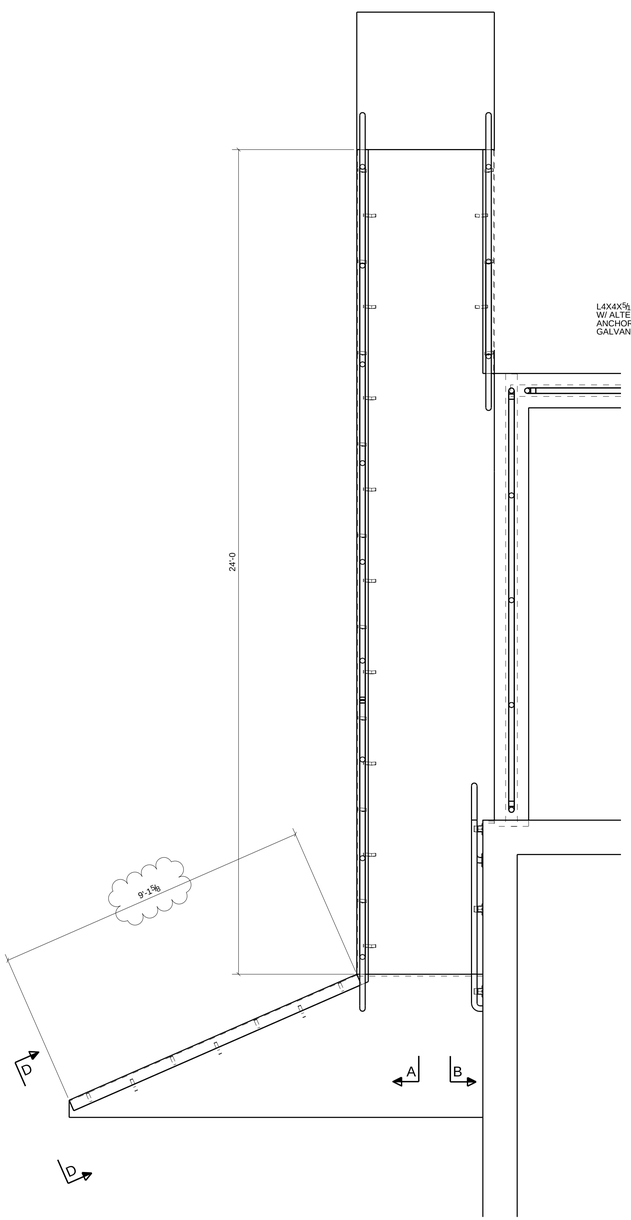

DETAIL B
E111
1:24

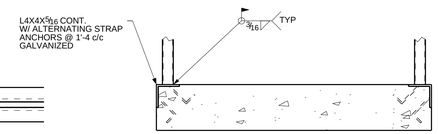

C - C

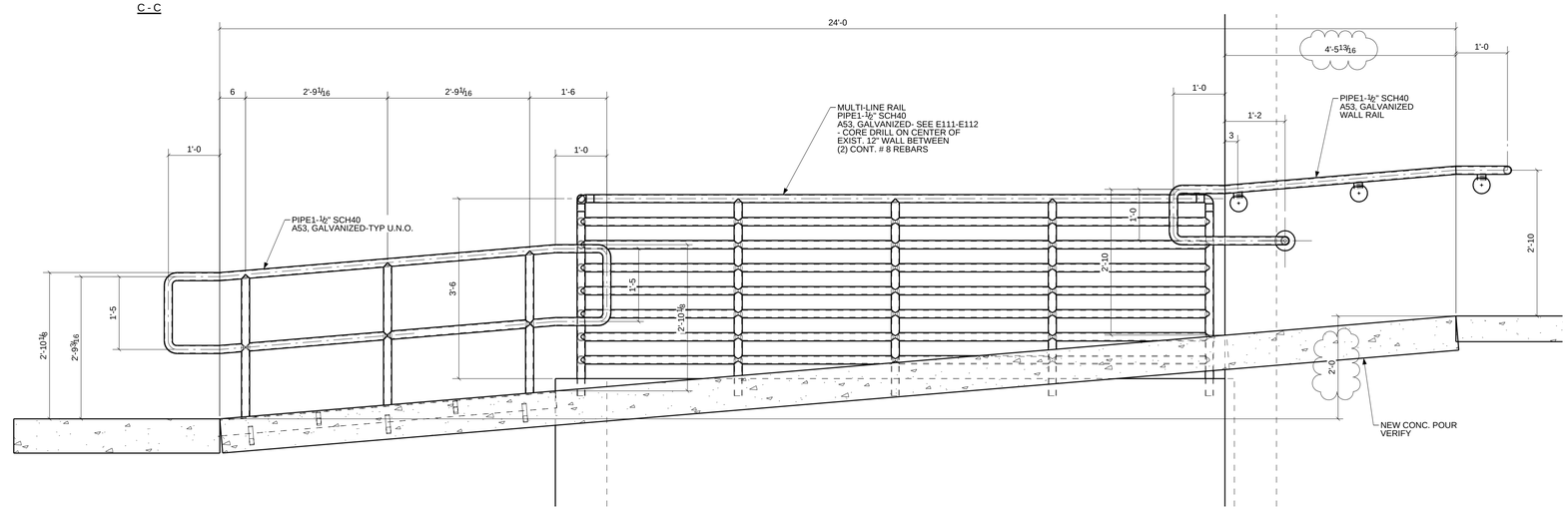

SECTION ~ B - B
1:16

DRAWINGS PREPARED BY DETAILER FROM INFORMATION CONTAINED IN THE PROJECT DOCUMENTS WITH INSTRUCTIONS FROM THE FABRICATOR. DETAILER IS NOT RESPONSIBLE FOR ANY DESIGN, ENGINEERING OR CODE ISSUES WHICH MAY ARISE FROM THE USE OF THESE DRAWINGS. APPROVALS SHOULD BE OBTAINED FROM THE OWNER, ARCHITECT, ENGINEER, CONTRACTOR, WHICH EVER IS APPLICABLE. THE FABRICATOR SHOULD CHECK THE DETAIL DOCUMENTS FOR CORRECTNESS BEFORE RELEASING FOR FABRICATION. THE USE OF THE DETAILED DRAWINGS FOR FABRICATION CONSTITUTES ACCEPTANCE AND APPROVAL OF THE DRAWINGS, MATERIAL LIST OR CUT LIST, WHICH EVER APPLIES.

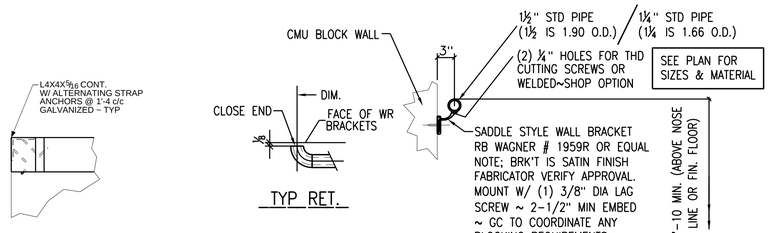

TYPICAL WALL RAIL DETAILS
SCALE 1" = 1'-0

TYP RET.

SECTION ~ D - D

REV.	DESCRIPTION	DATE	DWN	CHK
A	For Approval & Field Survey	10/12/18	TMc	TAN

GENERAL NOTES

MATERIAL: A992 / A36 U/N
ELECTRODES: E70XX LH
REF. DRG.
HOLES: 13/16 DIA. U/N
CONN'S: -
SURFACE PREP.
AND PAINT:
SSPC-SP-2
GREY PRIMER DEVOE NA-195 (U.N.)

JOB USE
SHOP
APPROVAL

DESCRIPTION: PLAN ~ AREAWAY ~ A107 & DOCK RAMP ~ C100 (3 o f 3)

PROJ. NAME Hamilton High School Phase III
LOCATION Hamilton City School District - Hamilton, OH

DRAWN BY TMc
DATE 10/16/2010
CHKD. BY TAN
DATE

CONTRACTOR GC Contracting
ARCH./ENG. SHP

Avenue Fabricating Inc.
1281 Clough Pike
Batavia, OH 45103
(513) 752-1911

JOB No. 10-16
DRG. No. E113
REV. A

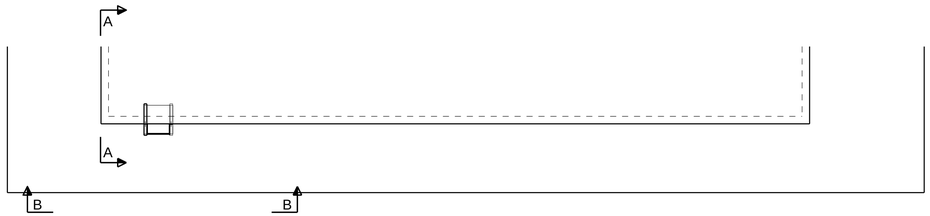

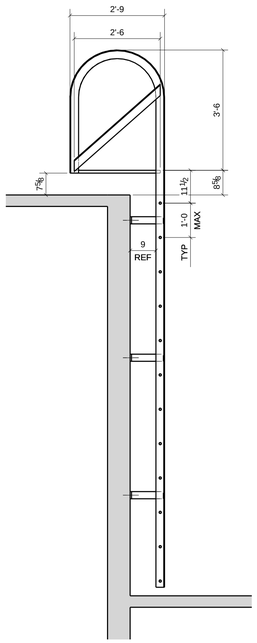

A - A

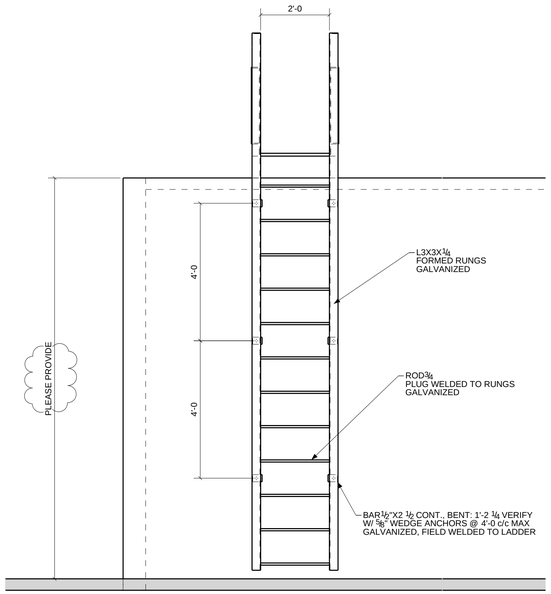

B - B

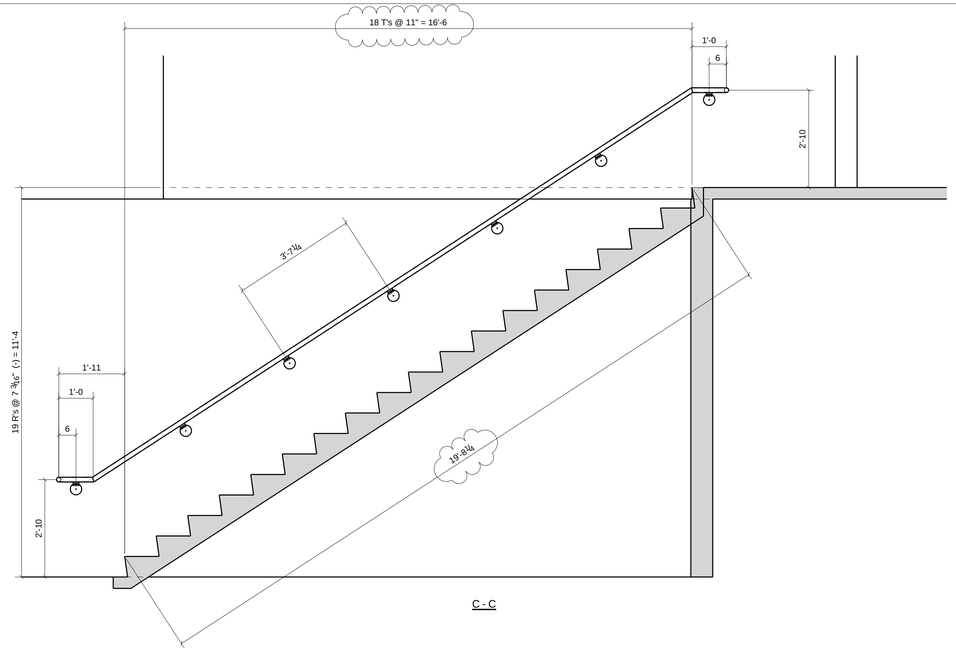

C - C

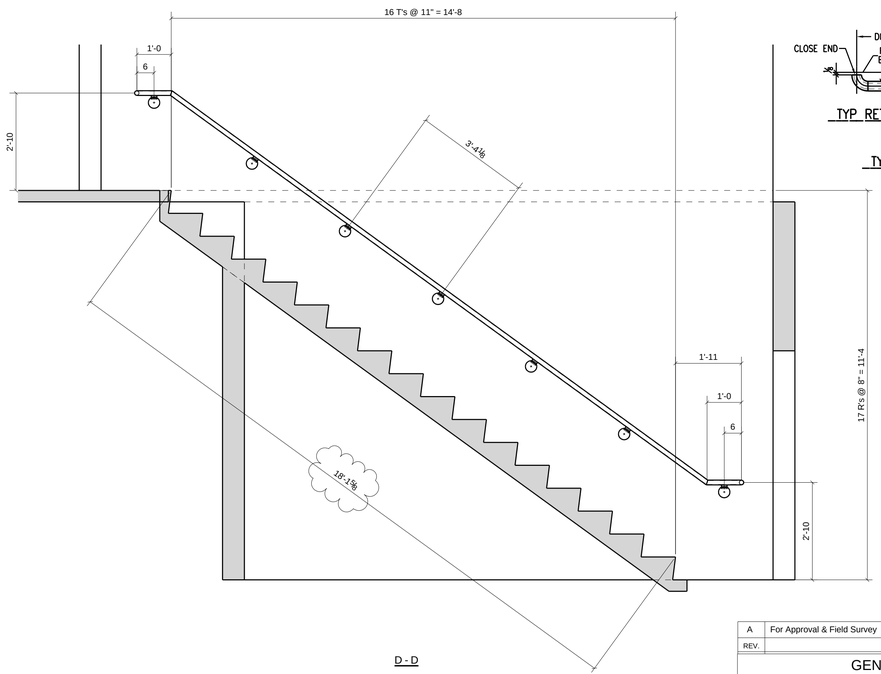

D - D

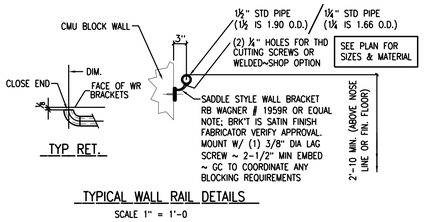

TYPICAL WALL RAIL DETAILS

SCALE 1" = 1'-0

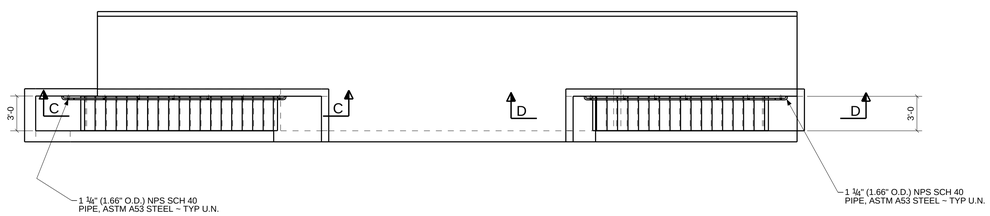

FABRICATOR SHOULD CHECK ALL EXISTING STAIRS & WALLS AND FIELD VERIFY MEASURMENTS AND MARK UP RETURNED SUBMITTALS TO DETAILER BEFORE RELEASING FOR FABRICATION.

PARTIAL PLAN @ AUDITORIUM ~ EXISTING STAIRS S-6 & S-7: RAILING & LADDER @ EXIST. ROOF

1:72

DRAWINGS PREPARED BY DETAILER FROM INFORMATION CONTAINED IN THE PROJECT DOCUMENTS WITH INSTRUCTIONS FROM THE FABRICATOR. DETAILER IS NOT RESPONSIBLE FOR ANY DESIGN, ENGINEERING OR CODE ISSUES WHICH MAY ARISE FROM THE USE OF THESE DRAWINGS. APPROVALS SHOULD BE OBTAINED FROM THE OWNER, ARCHITECT, ENGINEER, CONTRACTOR, WHICH EVER IS APPLICABLE. THE FABRICATOR SHOULD CHECK THE DETAIL DOCUMENTS FOR CORRECTNESS BEFORE RELEASING FOR FABRICATION. THE USE OF THE DETAILED DRAWINGS FOR FABRICATION CONSTITUTES ACCEPTANCE AND APPROVAL OF THE DRAWINGS, MATERIAL LIST OR CUT LIST, WHICH EVER APPLIES.

This project shall be erected in accordance with Section 7 of the AISC Code of Standard Practice, which includes 7.14 Correction of Errors, that states the following:

The corrections of minor misfits by moderate reaming, grinding, welding or cutting, and the drawing of elements into line with drift pins, shall be considered to be normal erection operations. Misfits of members and connections that cannot be corrected or that require major changes in member or connection configurations, shall be promptly reported to the owner's representatives for design and construction, and the fabricator by the erector, to enable the responsible entity to either correct the error or approve the most efficient and economical method of correction to be used by others.

All field welds to be made with E70xx low hydrogen electrodes.

REV.	DESCRIPTION	DATE	DWN	CHK
A	For Approval & Field Survey	10/12/18	TMc	TAN

GENERAL NOTES

MATERIAL: A992 / A36 U/N | ELECTRODES: E70XX LH | REF. DRG.

HOLES: 13/16 DIA. U/N | CONN'S: -

SURFACE PREP. AND PAINT:

SSPC-SP-2

GREY PRIMER DEVOE NA-195 (U.N,)

JOB USE | SHOP | APPROVAL

DESCRIPTION: PLAN ~ STAIRS S-6, S-7, & ROOF LADDER

PROJ. NAME: Hamilton High School Phase III

LOCATION: Hamilton City School District - Hamilton, OH

CONTRACTOR: GC Contracting | ARCH./ENG.: SHP

DRAWN BY: TMc | DATE: 10/17/2010 | CHKD. BY: TAN | DATE

Avenue Fabricating Inc.
1281 Clough Pike
Batavia, OH 45103
(513) 752-1911

JOB No.: 10-16

DRG. No.: E114 | REV.: A